TEACHING AIDS IN TRIBOLOGY

EVERETT GORDON FANCEY

TEACHING AIDS IN TRIBOLOGY

by

Everett Gordon Fancey, B. Eng.

A Report submitted in partial fulfillment
of the requirements for the degree of

MASTER OF ENGINEERING

Faculty of Engineering and Applied Science
Memorial University of Newfoundland

December 1978

St. John's Newfoundland

ABSTRACT

Equipment to be used as a teaching aid in tribology has been designed and tested. Design data, test results drawings and suggested experiments are provided for equipment covering the specific tribology topics of friction, dry wear, fretting, hydrodynamic lubrication and ball bearing failure.

Equipment included are:

1. a novel coefficient of friction device
2. a multipurpose tribo-demonstrator which can be used to perform dry friction, pure wear and fretting tests with the pin and disc configuration as well as provide experimental solutions to Reynolds' equation for hydrodynamic lubrication using a sector shaped pad.
3. an inverted 4-ball lubrication and ball bearing test rig.

ACKNOWLEDGEMENTS

I wish to thank the following:

Imperial Oil Enterprises Ltd. for graciously funding this project;

Technical Services personnel of Memorial University for their cooperation and excellent work during the project;

The machinist instructors at the College of Trades and Technology for special assistance when needed;

Mr. Paul Atwood for his aid during design developments;

Mr. Gerald Hickey for producing the finished drawings;

Mrs. Margaret Rose for skill and efficiency in typing the manuscript;

My friends and associates who helped with fruitful discussions;

Dr. John Mølgaard of Memorial University whose knowledge and help were surpassed only by his patience.

TABLE OF CONTENTS

LIST OF TABLES

LIST OF FIGURES

LIST OF SYMBOLS

b	dimension
B	life of rolling bearing
c	distance from neutral axis to fiber where stress is desired; bearing clearance; a constant
c_d	diametral clearance
c_r	radial clearance
C	basic dynamic load rating
d	inside diameter
D	outside diameter
e	eccentricity
E	modulus of elasticity
f	friction force
F	force
F_e	equivalent force
F_r	rated force
h	height
h_o	minimum film thickness
I	moment of inertia
J	polar moment of inertia
k_p	pressure coefficient
K	wear coefficient

K_f	fatigue strength reduction factor
L	dimension
M	moment
Mr	million revs
N	factor of safety, RPM
P	load, unit load, pressure (differentiated in text)
P_M	flow pressure
Q	load
r	radius
R	reaction, resistance
S	stress; S_a alternating stress; S_e equivalent stress; S_M mean stress; S_N endurance strength; S'_N endurance limit; S_y yield stress; S_u ultimate stress; second subscript S denotes any of the above in shear.
S	Sommerfeld number
T	torque
U	velocity
V	volume, voltage
W	weight, load
X	variable length
Y	deflection
Z	absolute viscosity; section modulus

ε	strain
η	form factor
θ	angle
λ_o	maximum alternating stress (Hertz contact)
μ	coefficient of friction, absolute viscosity
ν	kinematic viscosity
ρ	mass density
σ	normal stress
τ	shear stress
Ψ	angle

TEACHING AIDS IN TRIBOLOGY

1.0 INTRODUCTION

In June, 1971 the National Research Council of Canada set up an "Associate Committee on Lubrication (Tribology*) with representatives from industry, the universities and government to examine the present Canadian situation regarding research, development, education and information dissemination in the subject and to subsequently make recommendations to the National Research Council and other institutions that are concerned with these matters."[28] A survey conducted by the Education Subcommittee of this group concluded, among other things, that:

1. The time devoted to tribology instruction in Canadian universities and technical colleges is at a low level as compared with institutional hours made available for the teaching of strength of materials and other aspects of design technology.

2. Tribology laboratory instruction in the majority of universities and technical colleges is restricted in scope.

Canadian education institutions may, therefore, be faced with the problems of changing their mechanical

---

* Tribology as a term combining three related subjects of friction wear and lubrication

programs to increase the tribology content, and procuring equipment for sufficient laboratory backup. The project described here will hopefully prove useful to those institutions.

My enrollment at Memorial University came shortly after accepting a teaching position with the College of Trades and Technology in St. John's, Newfoundland; and therefore my interest in tribology comes from both sources - student and instructor. Also, my graduate supervisor, Dr. J. Mølgaard, is a member of the education Sub-committee on tribology for the National Research Council of Canada. Therefore, it became logical that the project I was to undertake for my Master's program should cover both fields of endeavour and hence the topic Teaching Aids in Tribology.

This report deals first with the objectives of my work, analyses the topics for which teaching equipment could be devised and discusses some criteria for such equipment. This is followed by general descriptions of the items actually designed, design calculations and the details of some trial runs with the completed equipment. An analysis of the results with respect to cost and performance is given as well as a discussion covering the total project area. The final section of the report contains draft manuals for each item.

2.0 GENERAL OBJECTIVES

The overall project objective was to prepare laboratory course experiments and equipment which could be used in conjunction with a regular undergraduate or technical school course in tribology. By doing this, it is possible to encourage the teaching of tribology and provide a means of obtaining some relatively low cost tribology equipment.

Justification of the usefulness of such a project comes from the same National Research Council publication mentioned earlier. One of the recommendations listed was "The details of suitable tribology experiments should be made available for the use of universities and technical colleges." Many of the institutions which responded to the committee's survey noted the lack of suitable equipment and experiments in tribology. Several institutions hoped to be introducing some experiments in the near future and maybe some of the designs given here will be useful.

Phases of the project included: a literature search to find out the types of equipment presently in use around the world as teaching aids in tribology; assessing the potential of these aids; modifying existing equipment and designing new equipment in instances where suitable equipment is not available.

3.0 TRIBOLOGY TOPICS

3.1 The Scope of Tribology

Eight aspects of tribology were chosen as possible topics for this project. The choice of these topics resulted from the topics covered in one of the graduate courses studied at Memorial University and are also similar to the major aspects of tribology which are outlined in "Part II - Tribology Courses"[29] of the Education Subcommittee of the Associate Committee on Tribology. These topics were:

1. Dry friction and wear
2. Rolling contact
3. Fluid lubrication principles
4. Types of failures
5. Boundary and solid lubrication
6. Seals
7. Gears
8. Oil properties and lubricating systems.

Design work was limited to certain of these topics; however, even for those for which there is no specific experiment designed here, the results of the literature search on them are given.

3.2 Tribology Topics which lend themselves to Experiments

Of course, within each topic itself there is a variety of sub-topics which deserve concentrated attention and demonstrations. A list of tribology topics which could benefit from laboratory reinforcement and demonstration is given below:

1. Dry friction and wear
   - i) Amonton's Law -- $f = uN$
   - ii) the meaning and implication of real area of contact between asperities
   - iii) the effect of elastic vs. plastic deformation at the contact points on friction
   - iv) generation of frictional heat and flash temperature
   - v) adhesion and particle transfer
   - vi) abrasion and the effect of particle size on abrasion
   - vii) corrosive wear and the chemistry of corrosive wear debris
   - viii) fatigue; rolling contact failure and spalling
   - ix) fretting

2. Rolling contact
   i) contact area shape
   ii) hystersis
   iii) various slip mechanisms

3. Fluid lubrication
   i) pressure distribution
   ii) effect of attitude angle
   iii) minimum film thickness
   iv) generation and use of $\frac{ZN}{P}$ curve

4. Types of bearing surface (ball and journal) failure
   i) overload
   ii) fatigue
   iii) lubrication breakdown and contamination
   iv) incorrect choice of materials
   v) misalignment
   vi) corrosion
   vii) cavitation

5. Boundary and solid lubrication
   i) effect of lubricant chemistry
   ii) smooth and stick slip motion
   iii) formation of adsorbed layer
   iv) temperature - breakdown of lubricant
   v) effect of lamellar solids on lubrication

6. Seals
   - i) types of seals
   - ii) temperature effects

7. Gears
   - i) film thickness between gears
   - ii) elasto hydrodynamic lubrication
   - iii) extreme pressure (E.P.) additives

8. Oil properties and lubricating systems
   - i) viscosity
   - ii) temperature and pressure effects
   - iii) oxidation
   - iv) filtration
   - v) chemical tests

3.3 Literature Review

A literature review of equipment and ideas being used to study and teach tribology was conducted. As expected, most of the references dealt with general research equipment and were not education oriented. Material specifically oriented towards teaching is reviewed here and the more general articles are simply listed in the bibliography without reference in the text. Also, because of the space involved, methods used by engineering institutions for standard testing are not reviewed but will be cited in the text if required.

A review of the major sources of information is given first, followed by a listing of articles with the topics demonstrated.

As a result of a report concerning education and training in tribology in the United Kingdom, the Institute of Tribology, University of Leeds, held a conference on the teaching of tribology. The conference report[17] is an excellent resource for persons teaching tribology. The list of contributors is in itself impressive. One of the sessions dealt with laboratory demonstrations and experiments in tribology, and the equipment mentioned includes a 4-ball machine, transparent thrust and step bearing models, journal bearing machines, a rolling element bearing testing machine, air bearing demonstration apparatus, impact fatigue apparatus, elastohydrodynamic demonstration model and a tilting pad hydrodynamic rig. A more comprehensive review of laboratory equipment available in the United Kingdom may well be in order.

Since then, our own National Research Council formed the Associate Committee on Tribology with its own education subcommittee. In 1973 it published a report[28] of a survey of tribological involvement in Canadian education institutions. Part II[29] of the same report lists suggested courses in tribology for trades, technical and speciality (graduate) courses. Two other publications[30,65] from NRC are

designed to aid tribologists. The first is a list of practical articles from tribology periodicals and the second is a guide to information sources on tribology. The articles cover the information available quite well (including a listing of tribology films) and readers are referred to these for lists of primary and secondary sources of information. Not included, however, are two texts[19,43] on tribology whereby the interdisciplinary topic is given treatment under a single cover instead of being divided into speciality books. This is an aid for the effective teaching of such a topic.

Another useful item is Tribology Projects for Schools[21] published by the department of Trade and Industry in the United Kingdom. The projects vary from very simple to involved, thus providing a good selection of ideas for tribology educators.

Kragelskii devotes a complete chapter (35 pages) of his text[51] to laboratory investigations of friction and wear in which he describes many of the various rigs and methods used.

An attempt was made to contact the education committee of ASLE to find out if any educational teaching aids were available from it, but without success. Two of its publications[13,71] are, however, very valuable sources of information for tribology teaching.

The following is a listing of tribology topics and articles describing equipment or methods pertinent to teaching them.

Tribology Topics and Pertinent References

Topic	Applicable References
General tribology	17, 21, 37, 39, 58
Instrumentation	32
Friction	5, 14, 51, 52
Wear	42, 47, 51, 62
Hydrodynamic Lubrication	1, 6, 7, 10, 11, 17, 23, 24, 25, 58
Rolling Contact	15, 17, 69, 70, 71
Lubricant testing	4, 17, 69, 70, 73
Elastohydrodynamic films	17, 38
Gears	72, 73

4.0 DESIGN

4.1 General Operational Criteria

The main criteria used for the designs were cost, simplicity and teaching effectiveness.

The cost of production per unit is kept to a minimum and the cost for materials and components for any piece of equipment should not exceed $800.00 (1978 prices). For several of the experiments, a common frame and drive are used to reduce the cost per unit.

Commercial equipment available for use in tribology laboratories is very expensive. Also, equipment described in literature is generally used for research and consequently too elaborate for the purposes here. The equipment described in this project can be fabricated in the work shops of most universities and technical colleges, thus eliminating the manufacturer's profit. Parts which can be obtained easily and cheaply (car parts, etc.) are used wherever possible, and commercially available components are incorporated wherever economically feasible. Certain required components are considered to be available in typical institutions and are not considered for cost analysis.

Teaching effectiveness is of course the most important. The equipment may be either used for demonstration

or used by students to conduct laboratory experiments. The experiments in some instances follow the philosophy of traditional laboratory assignments, i.e., the belief that by observing the dependencies of certain variables in the physical situations, the student is better able to retain the knowledge. However, in many aspects of tribology, the fundamental theory is not easily demonstrated and in those instances it is felt it is better to demonstrate some physical occurrence in relation to the materials commonly encountered in tribological situations. For example, a student better appreciates wear failure by comparing the relative wear of materials such as mild steel, cast iron, aluminum or nylon; or by observing induced failure in rolling elements as a result of lubrication manipulation.

It is for this reason that some of the experiments demonstrate a particular phenomenon by comparing different materials in the same situation.

The equipment is designed to be used either by instructors for demonstration purposes or by students during regular laboratory periods. The length of experiments which can be performed is generally limited to a half-day (3 hr) laboratory session, if possible.

It is not intended that any of the equipment be of sufficient sophistication for research or commercial use.

At least one experiment has been conducted on each piece of equipment for a test run and the results of this

experiment are given. Other suggested experiments are also given; and the users may well decide to design experiments for their own special interests once the equipment has been completed.

In instances where improvements in the design are evident after testing the prototypes, they will be made on the drawings or mentioned in the text.

4.2 Priority of Topics

Topics were chosen from the major aspects of tribology which could be demonstrated using equipment which fulfilled the design criteria.

Friction, wear and lubrication are of course the major aspects of tribology and therefore friction was the first topic investigated. It resulted in two designs dedicated towards the coefficient of friction. The first is a novel coefficient of friction device which provides a kit for comparing the friction of various materials. It complements the classical friction experiments (see Section 4.3.1) in that it provides instant comparisons of friction values whereas the others are concerned with methods of determining these values. The second design, part of the multi-purpose tribo demonstrator allows more analytic analysis of friction during the wear process.

This led to the use of the same gear for the wear studies, and by properly choosing the configuration the same

basic gear could be used for demonstrating hydrodynamic lubrication in slider bearings. Hence all three major aspects were covered within the same simple rig, satisfying the design criteria.

- Because of its compatability with the existing design, attachments were added to provide a capability for oscillatory motion for the multi-purpose tribo demonstrator.

Hydrodynamic slider bearings, although very important and interesting, are not the most important topic in lubrication. Lubricant properties and related element fatigue failure holds the major interest of tribologists. Hence more lubrication involvement in the designs was necessary, and a 4-ball failure and lubricant test rig was developed.

4.3 Design Units

4.3.1 Novel Coefficient of Friction Device

The first contact most students have with tribology is their introduction to friction in early physics courses. The main concepts learnt at this time concern force of friction, normal force and coefficient of friction, along with the laws of static and sliding friction. Laboratory experiments with friction at this stage generally involve the determination of the coefficient of friction between two materials using a series of friction and normal force

measurements; subsequent graphing of the data and the determination of μ (coefficient of friction) from the slope of the graph.

The two classical friction experiments being conducted in school laboratories are shown in Figures 1 and 2. These experiments are simple to conduct and also require very little laboratory equipment or space. They are good introductory experiments and are very necessary to illustrate the important facets of elementary friction technology. The device described here complements these experiments.

The experiments previously described are intent on showing the relationship, $f \alpha N$, and in fact give the coefficient of static friction. It is simply described as the proportionality constant and the student is told it depends on the choice of materials, and that the values for various pairs of materials can be found in the tables of most handbooks. The device described here can be used to quickly generate such a table of values and in so doing impress upon the student, the importance of the materials being used. This device is unusual among simple devices in that it provides values for the coefficient of kinetic friction.

Many other more elaborate devices are described in the literature for the study of friction and wear and reference to these is given in section 4.3.2 which deals with a larger rig for studing wear.

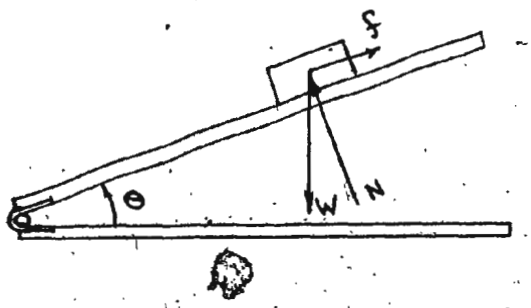

The angle is increased sufficiently to cause the block to slide. The tangent of the angle required is the coefficient of friction:

i.e. $\tan \theta = \mu = \frac{f}{N}$

Figure 1 Inclined Plane Coefficient of Friction Determination

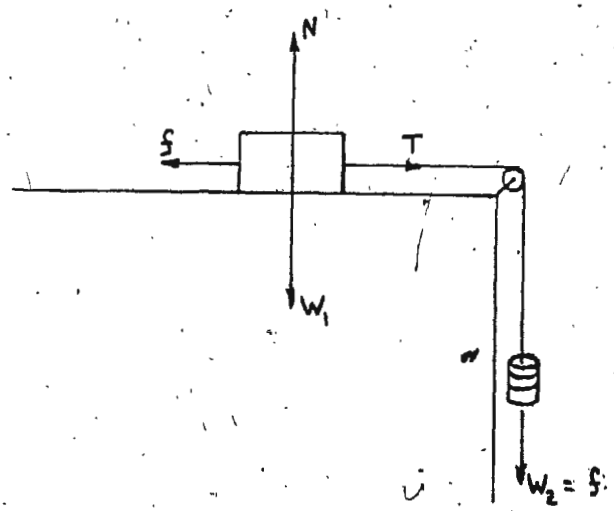

Enough weights are suspended to cause the slider to move and the ratio of the suspended weights to the total load is the coefficient of friction

Figure 2 Dead Weight Coefficient of Friction Determination

The idea and mathematical analysis is taken from an article in the Bulletin of Mechanical Engineering Education by G. Boothroyd.[5]

Refer to Figure 3.

The horizontal forces acting on the slider (1) as the straight edge (2) is moved relative to the surface (3) are shown in Figure 3. The frictional force between the slider and the surface acts in opposition to the direction of the motion across the surface. This direction is inclined at an angle Ψ to the direction of motion of the straightedge. Thus from Figure 3

$$N = \mu_{13} W \sin (\theta + \Psi) \qquad (1)$$

$$F = \mu_{13} W \cos (\theta + \Psi) \qquad (2)$$

where μ_{13} is the coefficient of friction between the slider and the surface and W is the weight of the slider.

$$\text{Now } \mu_{12} = F/N \qquad (3)$$

Therefore substitution of equation (1) & (2) in equation (3) gives

$$\mu_{12} = \cot (\theta + \Psi) \qquad (4)$$

Expanding and solving for Ψ gives

$$\tan \Psi = \frac{1 - \mu_{12} \tan\theta}{\mu_{12} + \tan \theta} \qquad (5)$$

It can be seen that the direction in which the slider moves is independent of both its weight and the coefficient of friction between the slider and the surface.

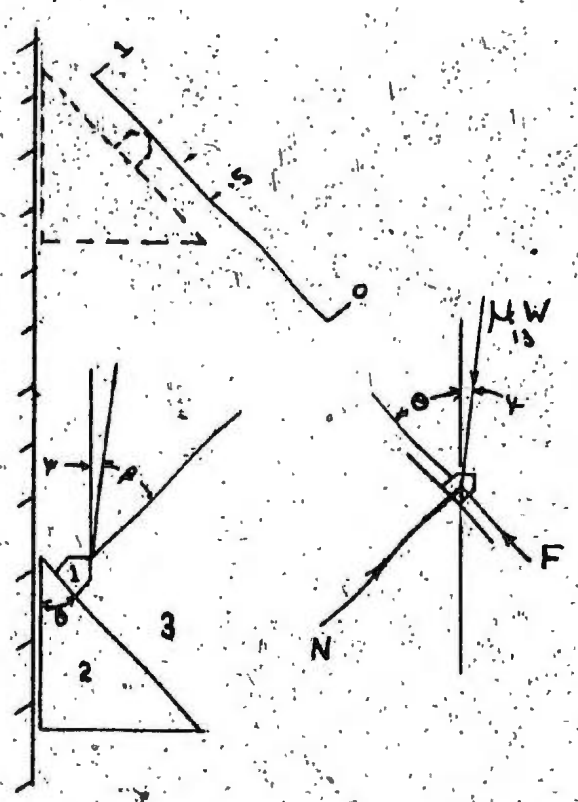

Figure 3 Force Diagram - Friction Device

Equation (5) may be used to construct the required scale for a given value of θ. If θ is 45°, a convenient value when $0 \leq \mu_{12} \leq 1$, equation (5) becomes

$$\tan \Psi = \frac{1 - \mu_{12}}{1 + \mu_{12}}$$

Further, if the scale is arranged parallel to the straightedge, then the scale is linear with respect to coefficient of friction.

Therefore, when the straight edge (2) is moved along the constraint, the slider (1) will move down and its position after a specified amount of travel of the straight edge depends only on the coefficient of friction between the slider and the straight edge and is independent of the friction between the table and the slider.

Using the foregoing as a basis, a coefficient of friction device was designed and constructed.

The primary considerations were that the test specimens be easily changed and the motion of the slider be smooth.

Consider that in Figure 4 a carrier or trolley (a) runs inside a tray (b) with raised sides. The sides act as guides for the trolley. On the trolley is attached one of the test materials (c) in the form of a flat bar. A portion of the bottom of the trolley is cut away so that the slider bar may push the slider (d) ahead of it without touching the

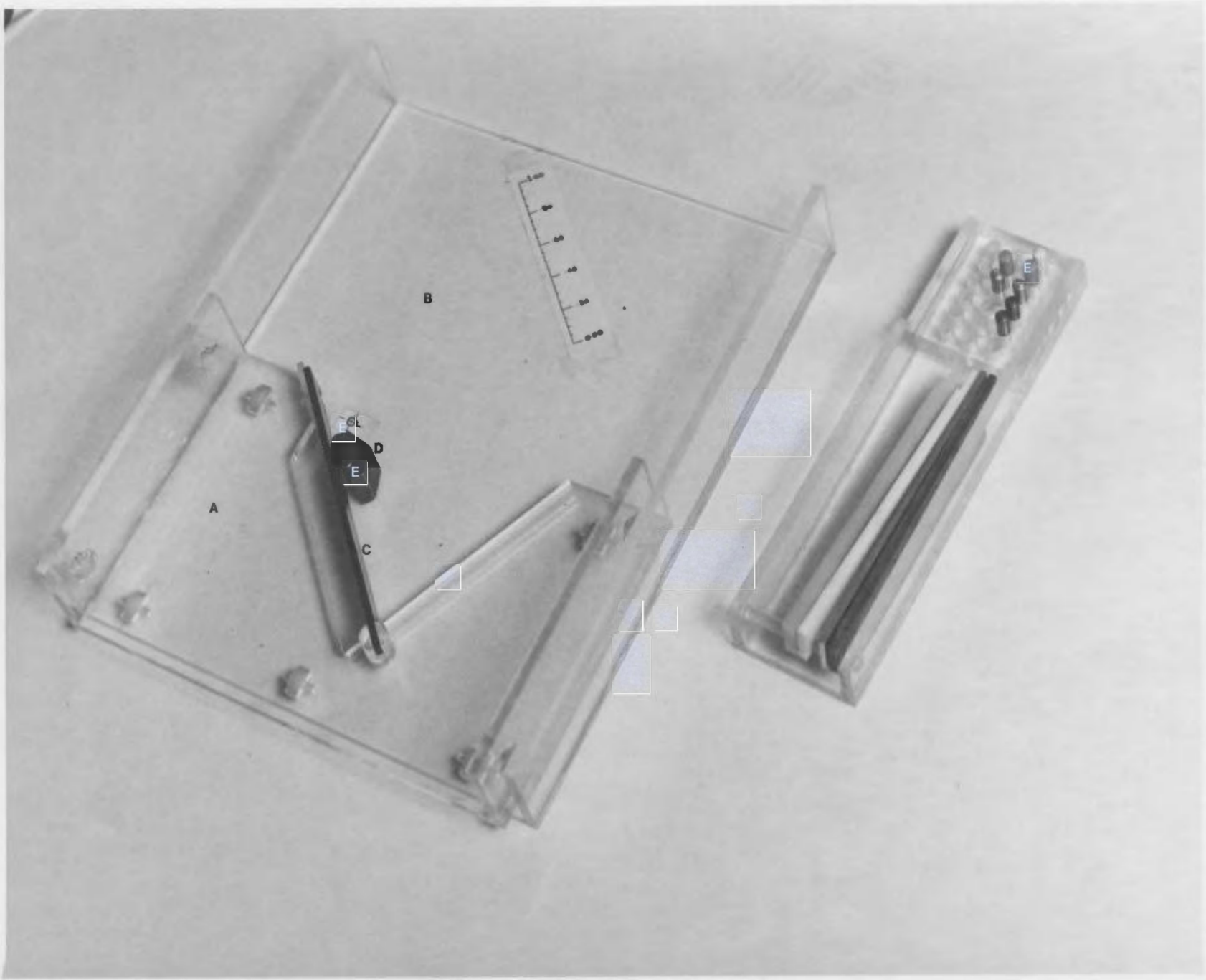

Figure 4 Novel Friction Device

trolley. The other test material (e) is cut from round sections and fitted in the slider. The holes in the slider are countersunk to mate with the specimen and prevent rotation. A scale is etched on the floor of the tray and the graduations correspond to coefficient values.

The device is constructed of plexiglass. Mechanical properties were of minor significance and plexiglass was used because the surfaces will not deteriorate when not in use. Also, plexiglass makes fabrication neat and simple with the finished product appealing to the eye.

4.3.2 Multipurpose Tribo-demonstrator

(Three Experiments)

Common Components

Configurations, speeds, etc. are selected for three experiments (sliding wear, hydrodynamic lubrication and wear on oscillatory motion) such that a common frame and drive may be used for these three. This reduces the average cost per experiment and reduces the space requirements in the laboratory.

Refer to Figure 5, for the next items.

Frame

The structure is essentially a 20" x 20" x 9" box frame of welded 1½" x 1½" x 1/8" M.S. angle. Two sets of cross-member angles run horizontally through the frame, one at 9"

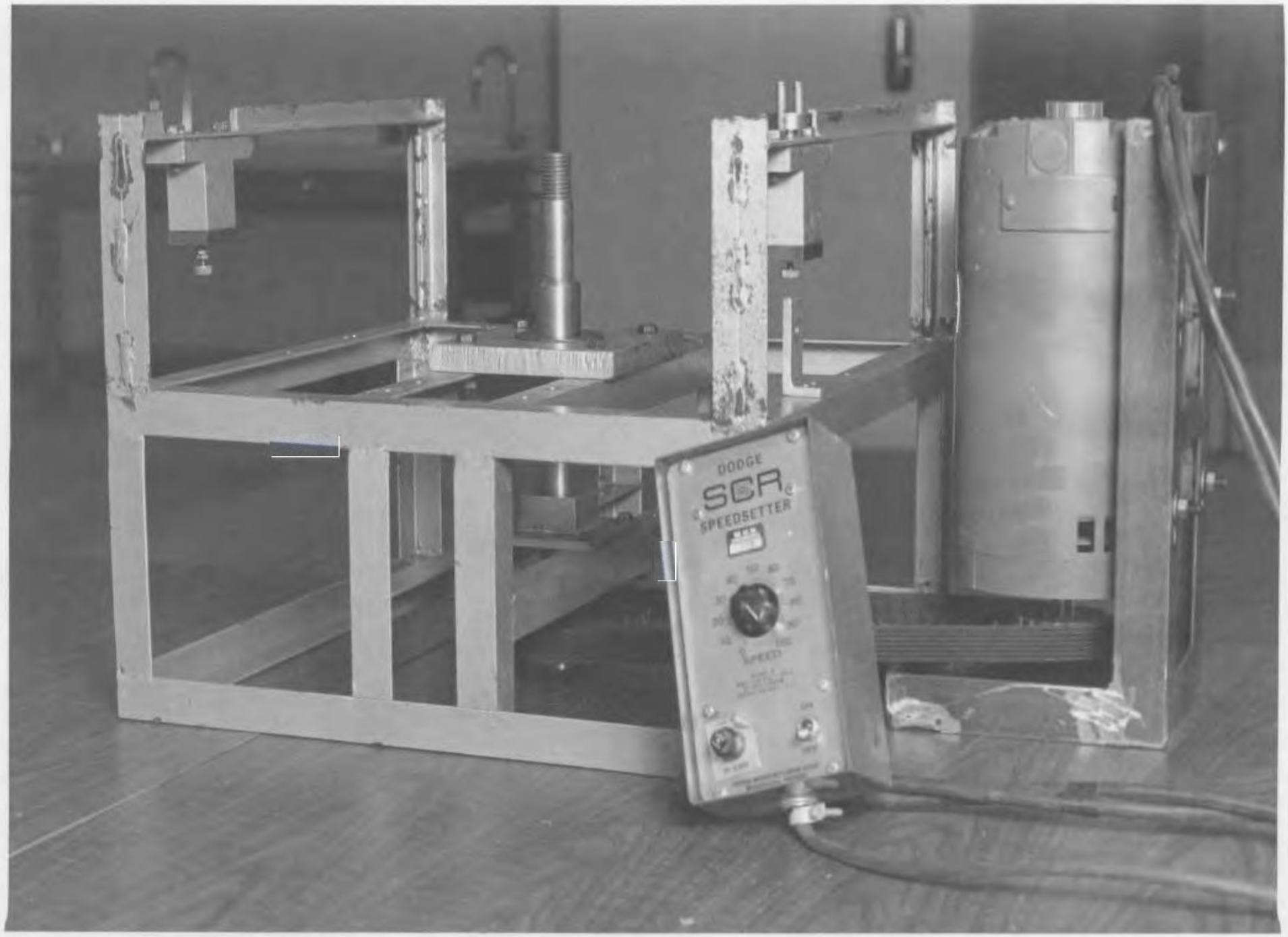

Figure 5 Multipurpose Tribo-demonstrator Frame

elevation and the other at 4" elevation. These support a shaft in bearings. On top of this frame is a welded superstructure for various attachments.

A quick check shows $1\frac{1}{4}$" L is sufficient to support the load. The only loading of concern is the load from the hydrodynamic assembly support. This total load is approximately 30 lbs.

The load, shear and moment diagram is given in Figure 6.

For this statically indeterminate situation, the maximum moment is given by:

$$M_{max} = \frac{PL}{8}$$

$$= \frac{30 \text{ lb.} \times 20 \text{ in.}}{8}$$

$$= 75 \text{ lb.-in}$$

$$\sigma_{max} = \frac{M}{Z}$$

$$= \frac{75 \text{ lb.-in}}{.10 \text{ in}^3}$$

$$= 750 \text{ lb./in}^2 \qquad \text{Negligible}$$

Shaft Design for Deflection:

Provided adequate strength is available (which will be checked afterwards), shaft end deflection is crucial only to the hydrodynamic rig. Here, the deflection is limited by the tolerance one can put on the measurement of the film thickness. This will be limited to .0001" at the bearing pad.

The pad is 6" from the shaft at a height of 4" above the support. By simple geometry the shaft deflection at the top must be no more than

$$.0001" \times \frac{4}{6} = .000067" \quad \text{(Refer to Figure 7)}$$

Now, apart from shaft eccentricities (which will be small in comparison), the moment on the end of the shaft will be the maximum load on the pad, approximately 5 lb (page 65) times the average distance to it (6")

i.e. $M = 5 \text{ lb.} \times 6" \text{ in}$

$= 30 \text{ lb.-in}$

Considering the shaft fixed at the bearing, the loading is simply a uniform moment over 4" of the shaft. If the shaft cross-section is constant, then the deflection is given by:

$$y = \frac{Mx^2}{2EI}$$

For a circular section, $I = \frac{\pi D^4}{64}$

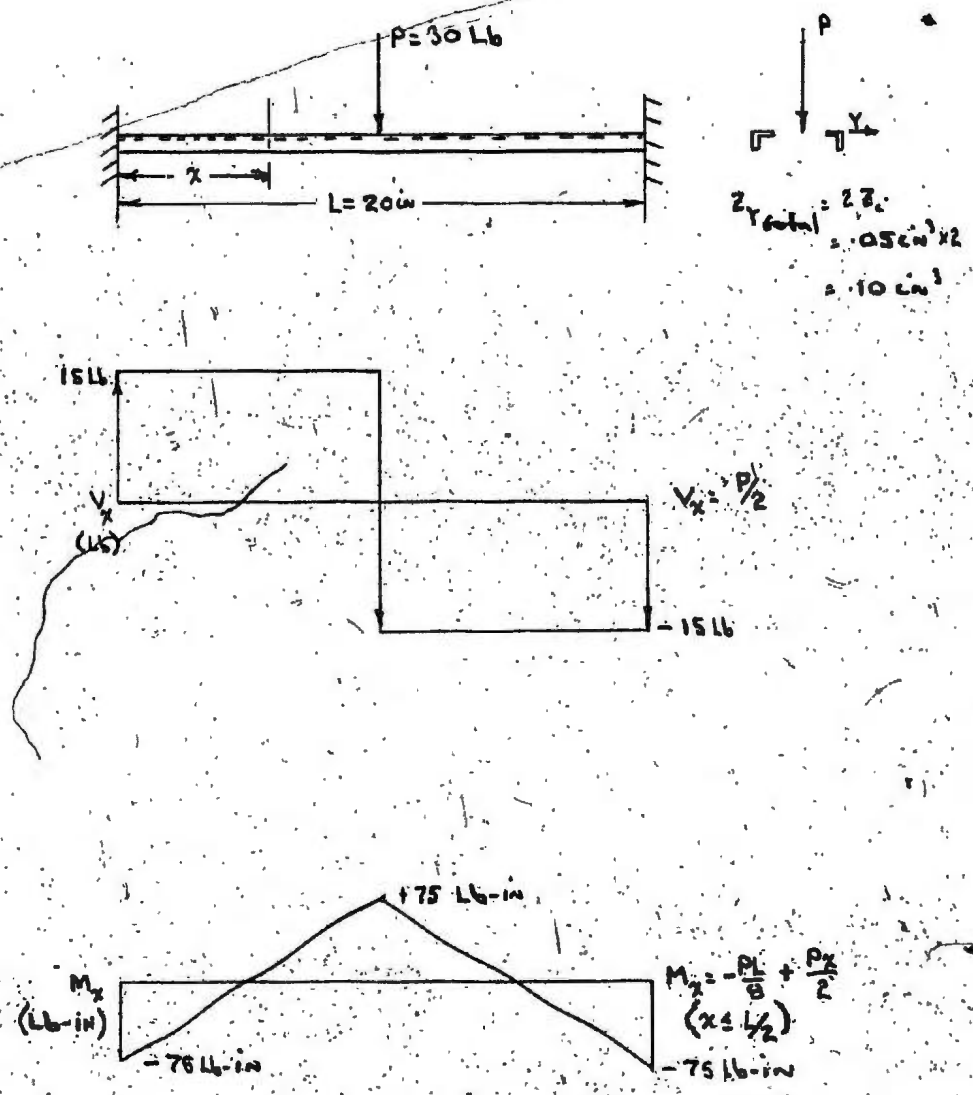

Figure 6 Load Shear and Moment Diagram for Frame X-member

$$\therefore \quad y = \frac{32\ Mx^2}{\pi E D^4}$$

$$\text{i.e. } y = \frac{(32)\ (30)\ (4)^2}{(\pi)\ (30)\ (10^6) D^4} \text{ in with } M = 30 \text{ lb.-in}$$

$$E = 30\text{x}10^6 \text{ lb/in}^2$$

$$D = \sqrt[4]{\frac{16\text{x}10^{-5}}{y}}$$

$$= \sqrt[4]{\frac{16\text{x}10^{-4}}{6.7\text{x}10^{-5}}}$$

$$D = 1.25"$$

The shaft cross-section is altered around this value to fit the other drive components.

<u>Shaft Strength Check</u>

A shaft to transmit .5 hp at 500 rpm via a 2" timing belt pulley drive is required. The pulley is fastened using a sled runner keyway. Commonly stocked material for shafting is plain carbon steel with carbon content between 0.30 and 0.40 percent. $\therefore$ Use the mechanical properties of AISI 1137 which are $S_u = 85$ ksi

$S_y = 50$ ksi

Take $S'_N = S_u/2 = 42.5$ ksi

Refer to shaft assembly drawing P. 192 for dimensions. From the hp. equation we have:

$$\frac{TN}{63000} = .5$$

$$\text{i.e. } \frac{(F_1 - F_2)\ (r)\ (N)}{63000} = .5$$

$$\therefore \frac{(F_1-F_2)(1)(500)}{63000} = .5$$ where F_1 & F_2 are belt tensions
r = pulley radius

$$F_1-F_2 = 63 \text{ lb.}$$

Assume the bending force to be

$$F_1+F_2 = 2(F_1-F_2) \qquad \text{(Faires, 33)}$$

$$F_1+F_2 = 126 \text{ lbs.}$$

Load, shear and moment diagram is given in Figure 7.

Maximum bending moment occurs at B

$$M_B = 126 \text{ lb.} \times 4 \text{ in} = 504 \text{ in-lb.}$$

This will cause an alternating bending stress at B

i.e. $S_a = \frac{Mc}{I} = \frac{M}{Z}$ where Z is the section modulus

$$= \frac{504}{\pi D^3/32} = \frac{16128}{\pi D^3} \text{ psi.}$$

Should get an equivalent stress S_e

where $S_e = \frac{S_N}{S_y} S_M + k_f S_a$ and

k_f = stress concentration factor
S_n = endurance limit
S_y = yield stress
S_m = mean stress

Since there is no discontinuity at B, $k_f = 1$.

Also the bending varies uniformly, i.e. $S_M = 0$

$$\therefore S_e = S_a = \frac{16128}{\pi D^3}$$

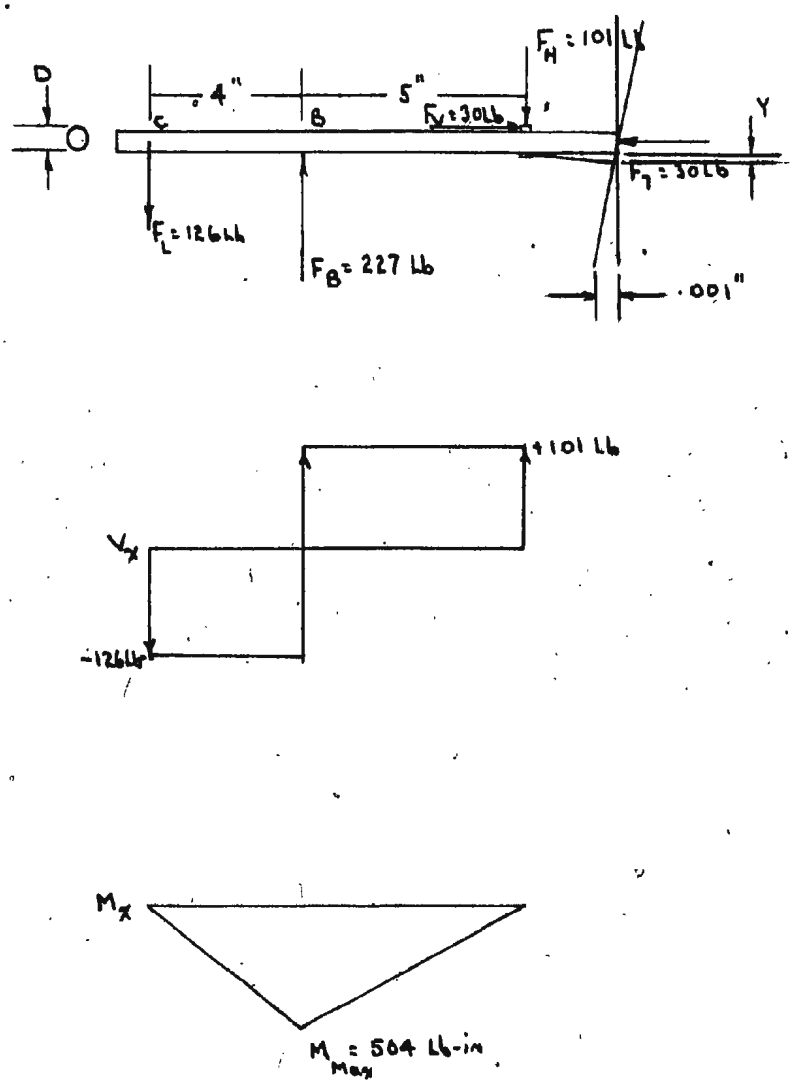

Figure 7 Load Shear and Moment Diagram for Shaft

Assume steady torque

$$\therefore \quad S_{as} = 0$$

$$\text{and } S_{MS} = \frac{Tc}{J} = \frac{T}{Z'} = \frac{(63)}{\pi D^3/16} = \frac{1010}{\pi D^3} \text{ psi}$$

(where Z' = polar section modulus)

Must also get an equivalent shear stress, Ses

where $S_{es} = \frac{S_{Ns}}{S_{ys}} S_{Ms} + k_{fs} S_{ns}$ and subscript s denotes shear

Assume $S_{Ns} = .6(42.5) = 25.5$ ksi

$S_{ys} = .6(50) = 30.0$ ksi

Note: These values are similar to those used for octahedral shear stress theory.

Also $k_{fs} = 1$

$$\therefore S_{es} = \frac{25.5}{30.0} \cdot \frac{1010}{\pi D^3} \text{ psi} + 1x(0)$$

$$= \frac{860}{\pi D^3} \text{ psi}$$

Substituting these values in the design equation, and including a size factor .85 (expecting D <.5 in) and surface factor .85

$$\frac{1}{N} = \left[\left(\frac{S_e}{S_N}\right)^2 + \left(\frac{S_{es}}{S_{Ns}}\right)^2\right]^{\frac{1}{2}}$$

$$= \left[\left(\frac{16128}{\pi D^3 \cdot 85 \times 42500 \times .85}\right)^2 + \left(\frac{860}{\pi D^3 .25500}\right)^2\right]^{\frac{1}{2}}$$

$$N = \frac{\pi D^3}{.526}$$

At B, D = 1.125 in

$$\therefore \quad N = \frac{\pi(1.125)^3}{.526} \simeq 8.5$$

A high factor of safety is expected because of the rigorous deflection demand previously placed on the shaft.

Bearing Arrangement

The bearing arrangement as it now exists, consists of a single row angular contact ball bearing above (nearest the disc) a full journal bearing. Power is supplied below the journal.

This may not be the best arrangement, but it was used for convenience during testing.

The original arrangement used a self-aligning radial bearing in place of the journal. This did not provide the rigid arrangement desired. However, journal bearings (from the fretting arrangement) were available and of the right size. One of these was used, replacing the self aligning bearing. Although not entirely satisfactory, this did work. A more satisfactory arrangement, especially considering the high demand for rigidity would have consisted of two pure radial bearings below a pure thrust bearing.

The bearing designs which follow are for the rig as it now exists.

Journal Bearing Design

For the journal we have low speed and light loads with negligible temperature rise. This corresponds to ASA classification RC 3 which gives hole and shaft tolerances respectively as $\frac{+.0000 \text{ in}}{+.0005 \text{ in}}$

and $\frac{-.0008 \text{ in}}{-.0013 \text{ in}}$

The corresponding shaft finish is approximately 125 μ RMS i.e. the outside limits of high grade machine work. Because of the type of use for this machine, i.e. vertical drive with very intermittent use, oil would be continually leaking from an oil system between experiments and the addition of the oil feed system would be costly and cumbersome. Also, the machine will seldom run at the design speed of 500 rpm. Hence it appears the best solution would be to allow the bearing to run in boundary lubrication with the operator giving an application of grease when necessary. A design required for full hydrodynamic lubrication is nonetheless given below.

From the class of fit, and for central distribution of the manufacturing process

$$c_d = \frac{.0000 + .0005}{2} - \frac{(-.0008 - .0013)}{2}$$

$$= .0013 \text{ in}$$

$$\text{or } c_r = c_d/2 = .00065, \text{ say } .0007 \text{ in}$$

Assume h_o = .0003 in.(.0001 absolute minimum - Faires, 33)

i.e. $h_o/c_r = \frac{.0003}{.0007} = .428$

For h_o/c_r = .428 & L/D = 1, Sommerfeld No. $S = .13 = \frac{\mu N_s}{P}\left[\frac{r}{c_r}\right]^2$

where $P = \frac{W}{2rL}$

For this bearing $P = \frac{227}{2\frac{(1.125)}{2}(1.125)} = 180 \text{ lb/in}^2$

N_s = 500 rpm = 8.3 rps

r = .5625 in

c_r = .0007 in

This gives:

$$\mu = \frac{SP}{N_s}\left[\frac{c_r}{r}\right]^2$$

$$= \frac{(.13)(180)}{8.3}\left[\frac{.0007}{.5625}\right]^2$$

$\mu = 4.4\text{x}10^{-6}$ reyns. (very light turbine oil)

Ball Bearing Selection

This bearing must take a combination of radial and thrust loading. An angular contact ball bearing will do this. Without any fear of thrust reversal, a single bearing is sufficient.

Since the shaft has been selected, this will determine the bearing size, but its life will have to be

checked. From SKF technical data, with an I.D. 1.125 in. we get Bearing No. 7206 B, I.D. = 1.1811 and basic dynamic load rating, C, of 3550 lb.

Since the radial load is much greater than the thrust, the equivalent load, $F_e = P$ = radial load = 101 lb. (see Figure 7).

$\therefore$ the load ratio $C/P = \frac{3550}{101} = 35$

Checking the design nomogram we see this will practically give infinite life.

Design life for equipment like this should be around 500 hrs (Faires) which gives $C/P = 2.5$ i.e. C = 253 lb. However, this would require a change in shaft size.

Drive

Since the rig is being designed to use a motor which must be available for other purposes, it cannot be attached and therefore requires either belt or O-ring drive. O rings are used to eliminate vibrations, which in this instance should not be a problem. Hence a more conventional belt drive is used. Since this will be in an oily environment, and slippage could be a problem a timing belt drive was selected. This is fortunate since some of the modern automobile engines have timing belt drives and the pulleys were scavenged from a junk dealer.

Motor

The rigs are driven by a SCR* speed controlled 1/2 hp - 1750 rpm general purpose motor. The pulley ratio is 3.5:1 which reduces the maximum speed to 500 rpm, which is needed for the wear rig, see page 42. Also from other calculations, page 47 and page 66 we see the power requirements are much less than 1/2 hp, but it was decided to purchase a motor with potential capability for any other pieces of equipment to be designed in the future.

Pin and Disc Machine for Friction and Wear

Friction and wear are two phenomena which are nearly always dealt with simultaneously. In fact the entire science of tribology deals with friction and wear and the reduction of each. Yet there is no known general functional relationship between friction and wear. For this reason, friction and wear studies should be separated; but, since both involve relatively moving surfaces, a device which produces friction necessarily causes wear and could be used to study either friction or wear or both.

Perhaps the most important factor influencing friction and wear is the type of material comprising the surfaces. Naturally each material has its own properties such as hardness, shear strength, etc. and the dependency of friction and wear can be isolated. Yet in dealing with a known engineering material, the name seems to carry more

* Silcon Controlled Rectifier

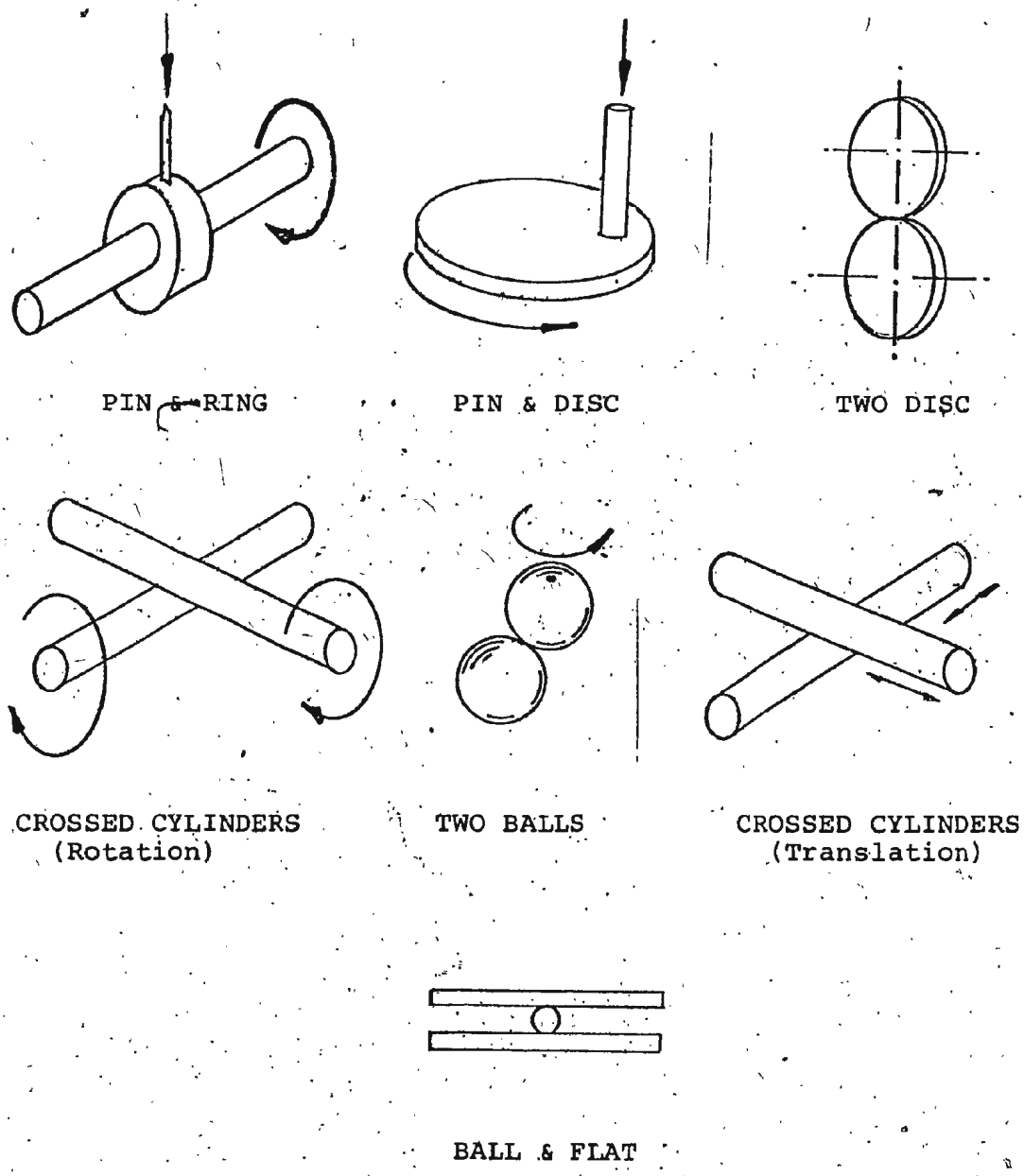

Figure 8 Possible Wear Configurations

significance than a resume of its properties. Therefore a friction and wear device that allows comparative analysis with other materials would appear to be most appropriate, especially at the undergraduate level. Detailed analysis of the effect of any one particular property is usually reserved for graduate or industrial research since careful control is required over all the other properties. It is, however, possible to have a relatively simple device which does demonstrate some functional relationships. With this device, the dependency of wear on speed, load and type of material will be demonstrated. Also, simultaneous measurement of friction can be achieved.

Configuration

When choosing a test rig for wear studies, choice of a suitable configuration is the main concern. Some of these configurations are shown in Figure 8.

Many rigs using the above configurations are described in the literature surveyed and are listed in the reference section. The most comprehensive works are found in a text by Kragelskii[51] and a catalog publication by ASLE.[13] In his text on friction and wear, Kragelskii devotes a complete chapter to laboratory investigations of friction and wear. He describes the parameters of interest as well as a wide variety of rigs presently in use. The ASLE's publication is a catalog of friction and wear devices

presently being used for testing. The remaining references are to articles of individual researchers who have described their equipment in their publication.

In selecting a configuration for the test rig here, several factors were of paramount importance. Firstly, to maintain the philosophy of the series of experiments, the test pieces must be readily changed and have a simple geometry so that different materials can be easily used. Also, the configuration should lend itself to adaptations for other experiments. The other pieces of equipment with similar drive and structural requirements are the hydrodynamic and fretting rigs. The drive and frame was chosen to satisfy all three, and the wear configuration most suited to the common requirement was the pin and disc. Using this as the basis, the assembly shown in Figure 9 and described below was designed. The particular design decisions and calculations follow the description.

In Figure 9, the disc (D) is a 10 in diameter, 1/2 in thick mild steel plate with an oil trough (T) machined near the outside circumference. A replaceable hardened steel lining which is screwed to the plate acts as the disc wear surface (S). The other wear surface, the pin (P), fits into a holder which slides through a hole in the holding bar (B). Dead weights (W) are placed on the pin. The holding bar is pivoted at C and held in place by two wires attached to two vertical cantilevers. Strain gauges (S.G.) are placed on

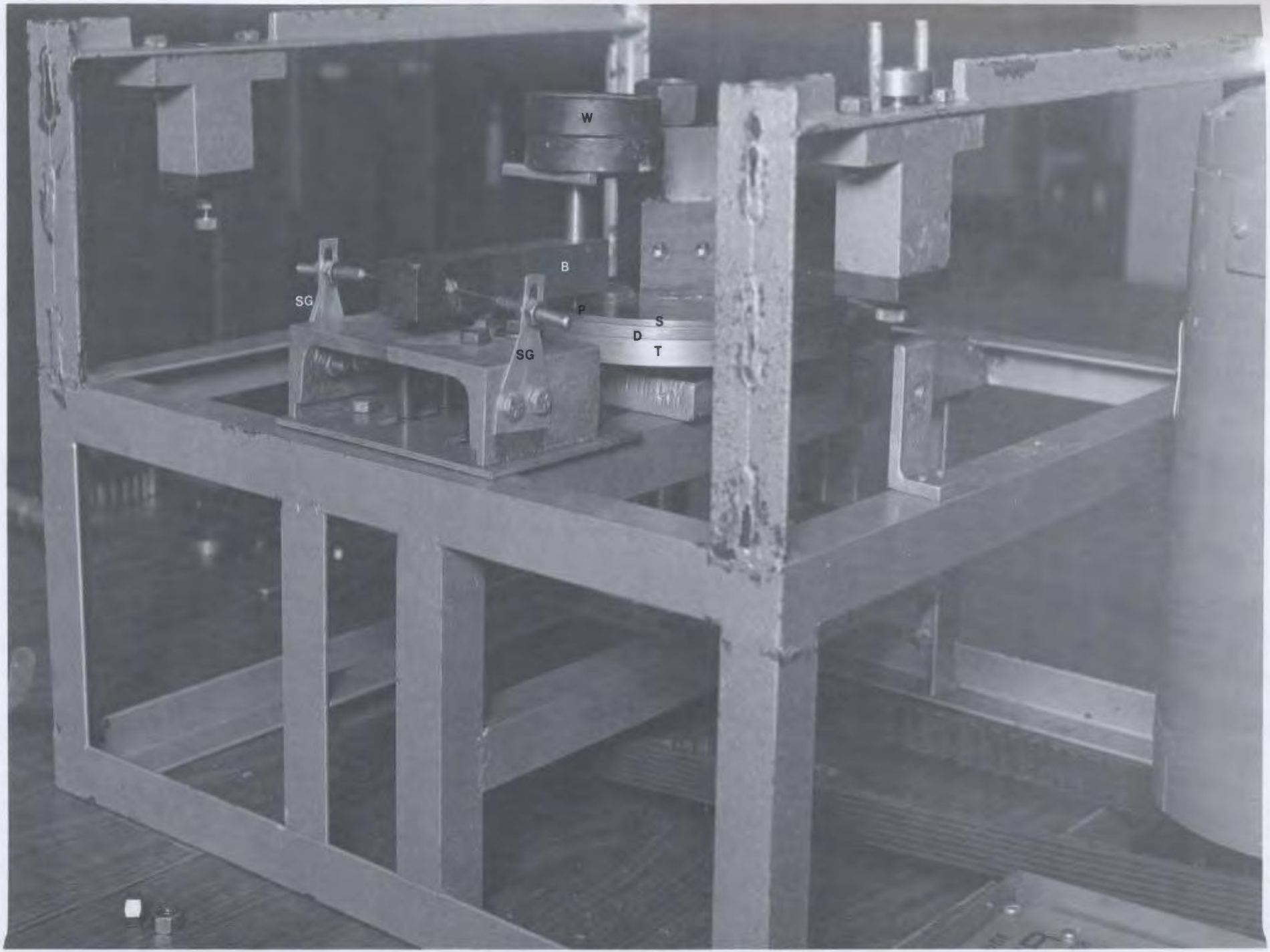

Figure 9 Pin and Disc Wear Machine

the cantilevers for friction measurements. The cantilevers, bar and pivot are fixed to a holder which is bolted to the frame. The holder can be moved to give wear at different diameters on the disc. Speed is controlled at the SCR controller and measured by a stroboscope or other convenient rpm measurement device.

Wear measurements are made at specified time intervals, and then using the speed and wear diameter, correlated to the sliding distance.

Loading

The simplest and most accurate type of loading is of course direct dead weight loading. This required the construction of a simple platform to hold the weights, but few problems are introduced because of this. It does, however, limit the size of the loads which can be used to approximately 5 lbs. Larger forces would require some indirect method (levers, screws, hydraulics etc.) and complicate the situation more than is necessary for this type of experiment. Also the load remains constant, even if the disc is not properly aligned since the weight "floats".

Speed

The machine should be able to produce measurable wear on an average test pin in a short period of time; say 1 to 30 min. The total wear over that period of time should

Using .01 in. as the minimum wear length to be resolved, ($1/_{128}$" being the resolution of an ordinary vernier caliper) then for 5 wear measurements, the minimum wear length would be .05 in. A suitable range would be from .05 in to .5 in. If one assumes that the length worn away is .5 in on a .125 in diameter pin, then:

$$V = .785\ (.125)^2 \times .5\ \text{in}^3$$

$$= .00613\ \text{in}^3$$

and $N = \dfrac{.00613\ P_M}{30\ \pi\ KPD}$ to achieve this.

Taking 2 lbs. as the design load, and with a wear circle of 8 inches, we get:

$$N = \frac{.00613\ P_M}{30\ \pi \times 2 \times 8 \times K}$$

$$= 4 \times 10^{-6}\ \frac{P_M}{K}$$

For hardened steel on hardened steel

$$K = 1.3 \times 10^{-4}$$

$$P_M = 1.21 \times 10^6\ \text{psi}$$

$$\therefore\ N = 37000\ \text{RPM}$$

For mild steel

$$K = 7 \times 10^{-3}$$

$$P_M = 2.6 \times 10^5\ \text{psi}$$

$$\therefore\ N = 160\ \text{RPM}$$

be sufficient to give a reasonable wear vs time plot for the specimen. Kragelskii's data was used for a rough estimate of a suitable speed for this machine.

Kragelskii gives the design equation for the amount of wear as:

$$\frac{V}{L} = K\frac{P}{P_M}$$

where V = volume of wear

L = length of sliding

K = wear coefficient

P = load

P_M = flow pressure (hardness).

This equation is valid for high load/area contact, i.e. pin and disc. The K values are given for sliding against hardened tool steel and the flow pressure is given for the softest material. These values were obtained when the end of a 6mm (.236 in) diameter cylinder was rubbed against a ring of 24 mm (.945 in) diameter at a load of 400g (.88 lb). The wear mode was not mentioned.

For a disc of diameter D in. rotating at a speed of N rpm we get:

$L = \pi DN$ in/min

$\therefore$ for 30 min, $L = 30\ \pi DN$ inches.

Substituting this into the design equation we get:

$$N = \frac{V\ P_M}{30\ \pi KPD}$$

For 60/40 Brass

$K = 6 \times 10^{-4}$

$P_M = 1.4 \times 10^5$ lb/in^2

$\therefore N = 900$ RPM

For polyethylene

$K = 1.3 \times 10^{-7}$

$P_M = 2.4 \times 10^3$ lb/in^2

$\therefore N = 74000$ RPM

Obviously the extremes are far apart, but for softer materials such as brass, mild steel or aluminum, a design speed of 500 rpm would give wear rates that could easily be measured during an afternoon laboratory session. Also with higher loads, a longer time period and a lesser demand for wear, other wear rates for harder materials can be obtained. However, the design speed for this machine will be kept at 500 rpm in order to avoid the high speed problems of vibrations and safety requirements.

Disc

The wearing surface of the disc must be replaceable. This is accomplished by having a suitable surface screwed to a thicker and permanent plate. Hardened steel would be preferred for the wear surface, but it could be made of any material desired by the user. A circular saw blade (Rockwell C-62) was prepared as well as a mild steel disc.

Friction Measurement

Any number of ways are available for measuring forces including spring balances, counterweights, pressure sensors etc. However, for this experiment, vibration should be kept to a minimum and unless one wished to study stick-slip friction, a reasonably rigid system should be used. Here this is accomplished by transferring the force to a set of cantilevers, on which strain gauges are placed to detect the force.

Cantilever Design:

Refer to Figure 10

Neglecting the torsional effect of f, we get:

$2.5 \times f = P \times 1.5$

But $f = \mu N$ where $\mu = .3$ (average)

$N = 2$ lbs.

$$\therefore \; P = \frac{2.5}{1.5} \times .3 \times 2$$

$$= 1 \text{ lb.}$$

If the gauge is applied 1 in below P, we get the moment at the gauge = 1 lb x 1 in = 1 in-lb

Now:

$$\sigma_{max} = \frac{MC}{I}$$

and $\varepsilon = \frac{\sigma}{E} = \frac{MC}{EI} = \frac{M}{EZ}$

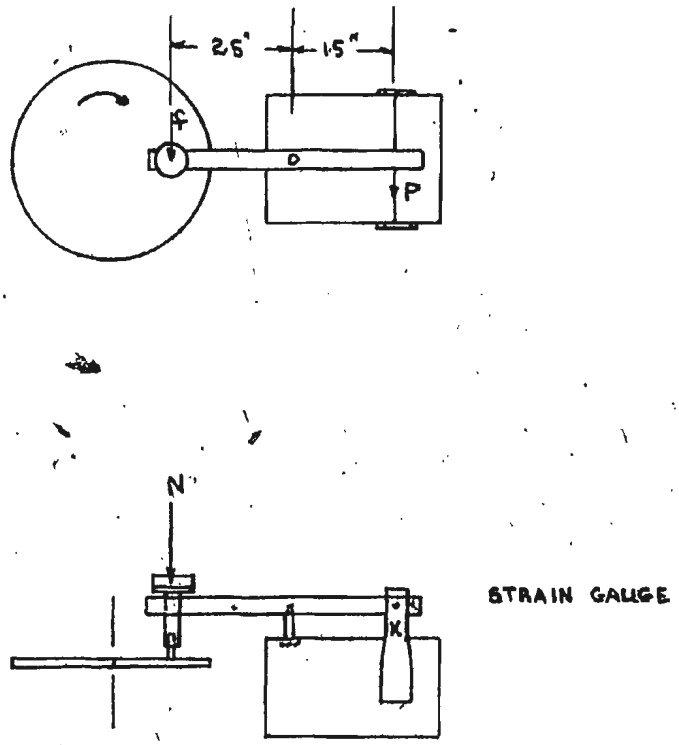

Figure 10 Friction Force Measurement System

For a rectangular cross-section $Z = bh^2/6$

$$\therefore \; h = \sqrt{\frac{6M}{E\varepsilon b}}$$

If one designs for a wheatstone bridge with a $.1_m V$ output for a 2V D.C. supply voltage, using a high impedance voltmeter one gets; referring to Figure 11:

$$V_c = \frac{R_1}{R_1 + R_2} V_s$$

Since $R_1 + R_2 = \text{const} = 2R$

$$\Delta V_c = \frac{\Delta R_1}{2R} V_s$$

Similarly for the second path of bridge, and hence we get

$$\Delta V = 2\Delta V_c = \frac{\Delta R_1}{R} V_s$$

i.e. $\frac{\Delta R}{R} = \frac{\Delta V}{V_s}$

Now $\varepsilon = \frac{(\Delta R)}{R} \frac{1}{G_f}$ where G_f = strain gauge factor

$$\varepsilon = \frac{\Delta V}{V_s} \frac{1}{G_f}$$

with $\Delta V = 1 \times 10^{-4}$ V and $V_s = 2V$ & $G_f = 2$

$$\varepsilon = \frac{1 \times 10^{-4}}{2 \times 2} = 25 \times 10^{-6}$$

If we take the base of the section 6 = .5 in, then

$$h = \sqrt{\frac{6 \times 1}{10 \times 10^6 \times 25 \times 10^{-6} \times .5}} = .22''$$ i.e. use 1/4" standard.

The strain gauges can be installed on the cantilevers

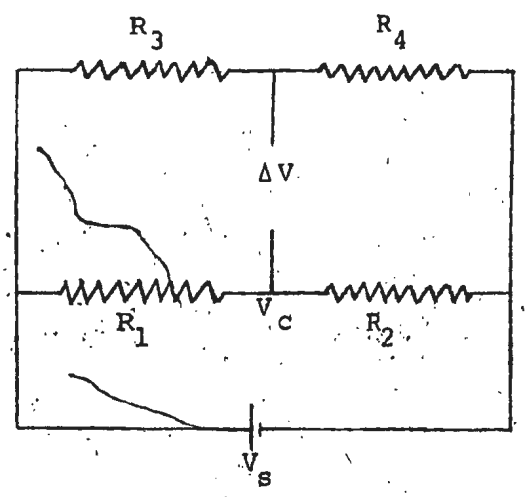

$R_1=R_2=R_3=R_4=R$

Figure 11 Wheatstone Bridge Circuit for Strain Gauges

and then calibrated in situ with known forces on the pin.

Power

$$Hp = \frac{TN}{63{,}000} \quad \text{where } T = \text{torque (in-lb)}, \; N = \text{rpm}$$

$$= \frac{1 \text{ lb} \times 4 \text{ in} \times 500 \text{ rpm}}{63000}$$

$$= .02 \text{ hp}$$

This estimate does not include a value for the bearing and other frictions, the sum of which will clearly still be small.

Hydrodynamic Lubrication Rig-Pad Bearing

The primary function of this equipment will be to demonstrate the pressure increase and profile generated in the plane slider bearing. It will therefore provide an experimental, quantitative demonstration of the solution of Reynolds' equation in the simplified form of:

$$\frac{\partial}{\partial x}\left[\frac{h^3}{\mu}\frac{\partial P}{\partial x}\right] + \frac{\partial}{\partial y}\left[\frac{h^3}{\mu}\frac{\partial P}{\partial y}\right] = 6\frac{\partial}{\partial x}(Uh)$$

where x, y are surface co-ordinates

$h = h(x)$ is the film thickness

μ = absolute viscosity

P = pressure

$U = U(x)$ is velocity

Solutions to the equations for the conditions imposed by this particular apparatus are to be provided in a form useable by an undergraduate student for the experiments.

Experimentation dealing with hydrodynamic lubrication requires some mode of relative motion between two surfaces forming a wedge. The dependent variable is of course the pressure (or load carrying capacity) generated between the surfaces. Its dependence on such variables as speed, angle of incline, minimum film thickness, viscosity (and/or temperature) and surface properties should be demonstrated.

Depending on the extent of the experiment and the variables to be exemplified, various equipment and techniques--although by no means plentiful--are described in the literature.

If only a quantitative demonstration is required, models as described by Boyd[6] should be sufficient. He describes a rather inexpensive and effective way of demonstrating the buildup of pressure using transparent plastics, simply by pushing a tapered block with holes drilled into it (the slider) along a lubricated surface and

observing the lubricant rise in the holes (see Figure 12). This type of motion does not, however, provide a means of continuous observation.

If more quantitative work is required, as should be the case at the university and technical school level, a method of continuous motion and variable manipulation is necessary. The most thorough of such work found by the author is described by Kettleborough, et al[50] in a 1954 paper. Here, however, the equipment was too detailed and the treatment too extensive for undergraduate concern, but more for research effort. It is nonetheless an excellent reference.

Dowson[23] refines Boyd's quantitative work slightly by controlling the movement of a perspex slider along an oil bath in a 30 inch trough where oils of various viscosity may be used (see Figure 13). This makes the work slightly more quantitative; yet the short duration of an experiment and the limited control of the variables remove this apparatus from consideration for detailed laboratory experimentation.

The only type of equipment discovered by the author with continuous motion speed control and variable manipulation (except for Kettleborough's) was like that described by Dr. Akers and Dr. Cameron.[10] Both use an endless belt moving under an inclined pad.

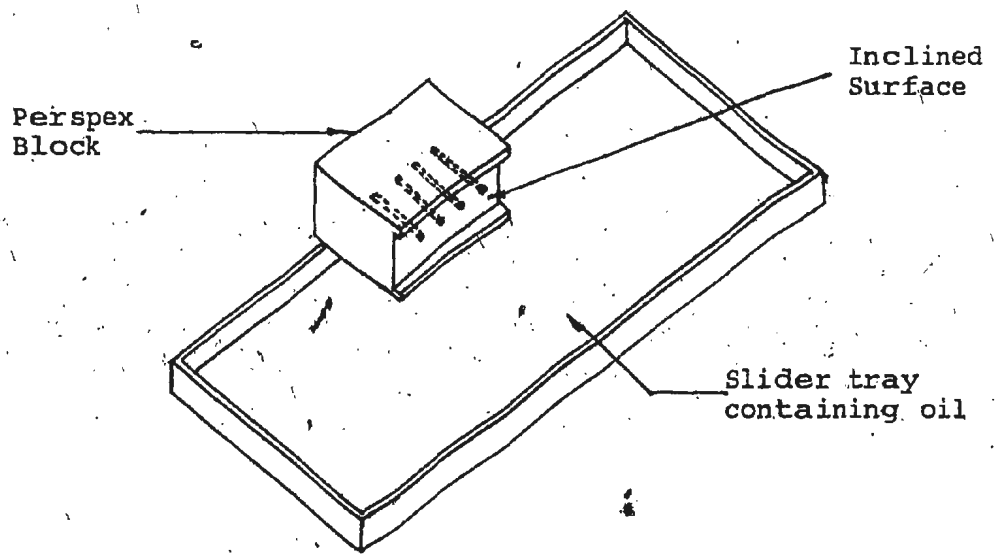

Figure 12 Slider Bearing Demonstration Apparatus - Boyd
(schematic only)

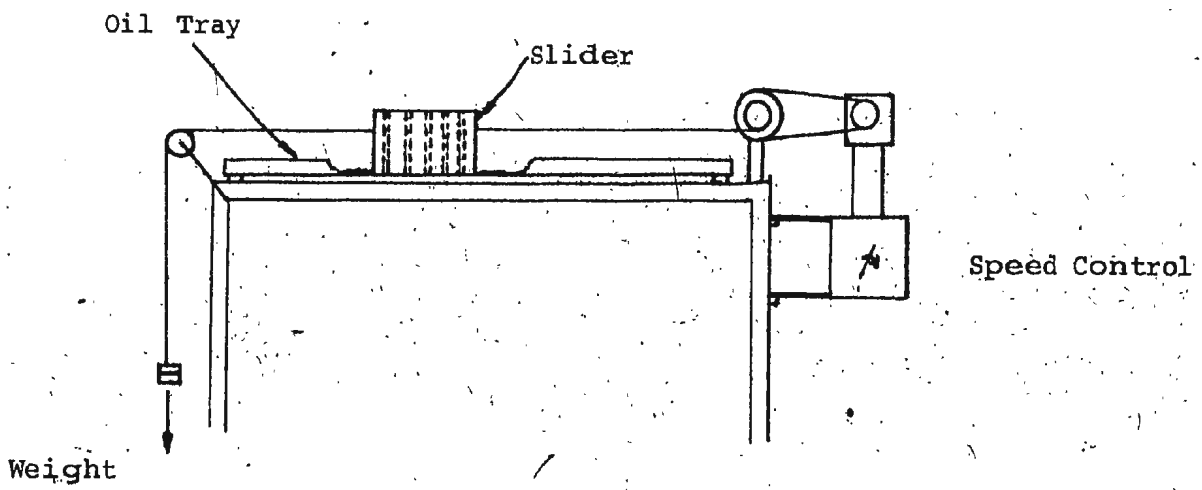

Figure 13 Slider Bearing Demonstration Apparatus – Dowson
(schematic only)

Dr. Akers' equipment (Figure 14) appears to be fairly easily reproduced; however, it too seems to be designed for quantitative work--especially with respect to load carrying ability and pad friction. Measurement of the pad angle or the pressure profile was not mentioned.

Dr. Cameron's rig (Figure 15) is by far the most versatile, with variable speed, infinite tilt control and pressure profile measurement. He makes use of an endless belt carrying a thin film of lubricant and moving under a stationary pad. The belt is driven by a variable speed motor. Holes in the pad allow for pressure taps from a manometer stand above the pad to be connected and the pressure profile obtained. The inlet and outlet gaps are measured directly with micrometers. When accurate film thickness measurements are made good experimental results can be obtained in terms of the two important parameters, film thickness ratio and velocity. The design does not, however, provide a quick method for varying viscosity or of measuring the load (except by integration of the pressure profile). This piece of equipment is not easily reproduced, but is available commercially.

The task therefore is to design and produce, as cheaply as possible, a piece of equipment capable of incorporating as many of the above features as possible--plus others.

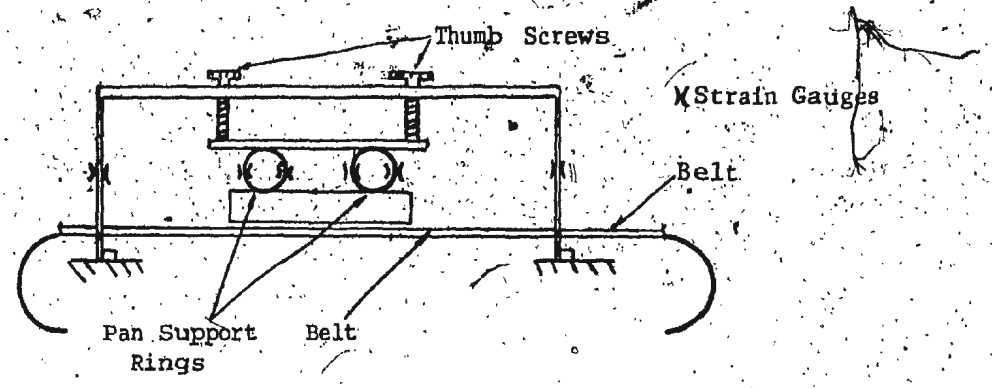

Figure 14 Slider Bearing Demonstration Apparatus - Akers (schematic only)

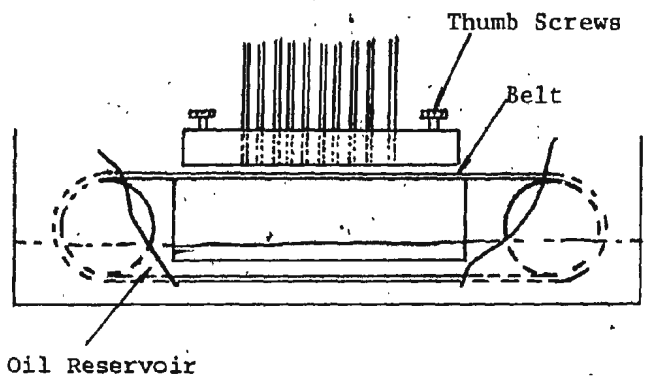

Figure 15 Slider Bearing Demonstration Apparatus - Cameron (schematic only)

The assembly shown in Figure 16 and described below was designed. The particular design decisions and calculations follow the description and detailed drawings are given in the appendix.

In Figure 16, the glass plated disc (D) rotates under a sector shaped bearing pad (P). The pad is attached to a cross-member (CM), the inclination of which is adjusted by fine threaded screws (S) at the ends of the bar. Oil is fed to the plate surface from a reservoir (R) above the apparatus and it moves under the pad, the pressure generated forces the oil into the manometer tubes (MT). The tubes are located to give the pressure profile throughout the bearing. The gap between the plate and the pad is measured with common thickness gauges. The oil is collected in a trough (T) and replaced in the reservoir. The assembly is supported by an angular contact bearing and located by a journal below it. Power is derived through a timing belt from a .5 hp motor controlled by an SCR controller.

Configuration

The first step in the design was to decide on a particular configuration to be used. Continuous motion with variable speed is needed and can be obtained either with an endless belt as used by Dr. Akers and Dr. Cameron, or by using a rotating disc. The advantages of the endless belt are that straight line motion is obtained and the simple support lends itself to very high rigidity. However, the

Figure 16 Hydrodynamic Lubrication Rig - Pad Bearing

belt is compressible and also does not resemble the situation which may be encountered in industry. If a rotating disc is used, the pad can be sector shaped, thus resembling actual industrial pad bearings. Also the surface of the disc can be specified to a very fine tolerance, allowing for closer working conditions. Glass plate can be used for the disc surface. Finally, this configuration can be used for experiments in wear simply by changing the disc to a wear disc setting up a pin and disc experiment. For these reasons it was decided to use the horizontal, rotating disc configuration. Of course, this introduced a slight complication in that the motion is curved, but this can be tolerated.

Disc

Space being a major consideration in most laboratories, it was decided to make the rig as compact as possible. The governing size here is the bearing support or disc. A size of 15 inch diameter was chosen, with a thickness of 1/2". A piece of 2" x 3" diameter solid stock was welded to the disc with gussets as shown to aid in machining and alignment. Also the increased inertia allows for very smooth operation. On top of the steel plate, a sheet of 1/4" plate glass is glued to provide the smooth surface required.

Bearing Pad

The main considerations for the pad (apart from its functional design) are that it be large enough to accommodate a sufficient number of holes for the pressure taps, and that these holes do not interrupt the continuity of the flow. A sector 2" along the radius and 5" along the outside circumference was chosen with 9 holes along the mid-circumferential arc and 5 along the mid radial line. The inlets to these manometer holes are only 1/32" in diameter and should not disturb the flow. The surface was ground smooth and lands machined underneath to allow for slight inlet pressure buildup and prevent starving of the bearing. A wiper was also attached to help direct the flow under the pad.

Pad Attachment and Film Thickness Measurement

When conventional gap measuring instruments are used the apparatus either tends to become cluttered, or the gauges themselves are often not working properly. [This can be annoying enough to undermine the purpose of the experiment.] This was the reason that a simpler method was sought. The solution decided on was to have the pad rigidly attached to a crossmember, the elevation of the ends of which can be adjusted, and the resulting inlet and outlet clearances measured with thickness gauges. Originally it was intended to use standard sized gauge blocks under the

supports at each end to eliminate thickness measurements altogether; however, the infinite control and simple fabrication of an adjusting screw mechanism led to its selection. In addition, one end of the beam is free so that it may float if the pressure is high enough. [If this were to happen with the present apparatus the manometer tubes must be deliberately plugged to avoid losing the oil at the high pressures involved in this condition.] This would give a direct demonstration of measuring of the load carrying ability of the oil film.

Pressure Measuring Device

The pressure measuring device simply consists of a bank of manometer tubes held in a plexiglass rack and fastened to the cross-member. The height to which the oil rises is used to calculate the pressure.

Oil Supply System

The oil is fed to the bearing from a reservoir (1/2 gallon can) placed above the apparatus. The outlet from the reservoir has a shut off valve on it. After passing through the bearing the oil is collected in the trough and drained into another reservoir, to be returned to the original reservoir. In this manner, a small quantity of oil is being used and can be changed quickly. For calculation of the oil flow rate see the following section on operating conditions.

The frame, running mechanism and motor, etc., is that dealt with earlier.

Operating Characteristics

Solutions for sector shaped pads can be approximated by those for rectangular pads if slope, speed and pad length are measured at the average radius.

From the Standard Handbook of Lubrication Engineers, Editors - O'Connor and Boyd we get for a rectangular pad

$$P = \frac{\mu\ U\ B}{h_2^{\ 2}} \left[\frac{6(a-1)(1-x_1)\ x_1}{(a+1)(a-ax_1+x_1)^2}\right]$$

$$\text{and } P_{max} = \frac{\mu\ U\ B}{h_2^{\ 2}} \quad \frac{1.5\ (a-1)}{a(a+1)}$$

where μ = absolute viscosity

U = velocity

B = pad length

h_2 = exit film thickness

h_1 = inlet film thickness

$a = h_1/h_2$

$x_1 = X/B$

P_{max} can be calculated for a given set of operating conditions, or conversely a required parameter (e.g. speed) can be calculated to give the maximum pressure tolerated with other conditions set. This relationship is actually

for an infinitely long bearing.

Fuller[36] reduces the equation for pressure distribution to

$$P = \frac{6 \mu U B}{h_2^2} k_p \quad \text{where } k_p = f\ (x,a)$$

Values of k_p in terms of $X/_B$ and the slope (he uses $M' = \frac{h_1}{h_2} - 1$) are calculated and plotted and a reproduction of his values is given in Figure 17.

The use of a finite width is accounted for by the use of another factor, η

$$P = \frac{6 \mu U B \eta}{h_2^2} k_p$$

A limited number of values of η are given by Fuller; [those taken from the experimental work of Kingsbury and Needs which are applied to total load] and a very limited number taken from the work of Michell to be applied to the pressure distribution.

Interpolating for this rig from both sets of data we get $\eta = .25$. Since these values agree so well it would be reasonable to assume $\eta = .25$ applied to the pressure distribution should give acceptable results for the bearing pad used here. Note that these are for inlet film thickness equal to twice the exit film thickness (i.e. $M' = 1$) and therefore best results would be obtained at this inclination.

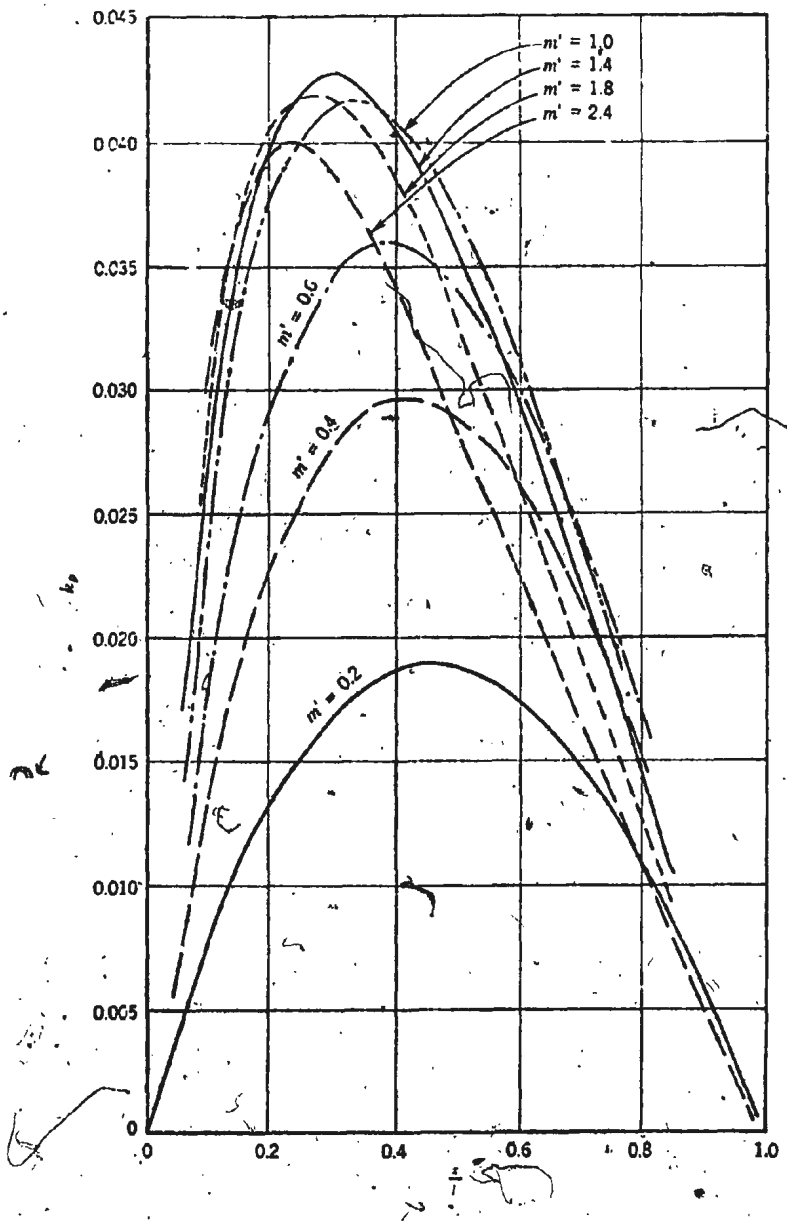

Figure 17 Plot of pressure coefficients for slider bearing

η is, however, relatively insensitive to M'.

Thus

$$P = \frac{6\ \mu\ U\ B\ (.25)}{h_2^{\ 2}}\ k_p$$

In terms of the RPM, N; the height in the manometer, H; and the kinematic viscosity ν, we have:

$$U = \frac{\pi N r}{30}$$

$$P = \rho\ g\ H$$

and $\mu = \nu\rho$

Substituting we get:

$$N = \frac{20 g\ H\ h_2^{\ 2}}{\pi\ \nu\ B\ r\ K_p}$$

Typical conditions imposed by this rig are:

H_{max} = 30 in

h_1 = .020 in

h_2 = .010 in

$M = \frac{h_1 - h_2}{B} = \frac{.02-.01}{3.82} = .0026$

M' = 1 which gives $K_{p_{max}} = .042$

B = 3.82 in

L = 2.00 in

r = 6.00 in.

If SAE 30 oil is used $\nu \simeq 355$ cs @ 20°C

$$= 3.55 \frac{CM^2}{sec} \times \frac{1}{2.54^2} \frac{in^2}{CM^2}$$

$$= .55 \ in^2/sec$$

Then:

$$N = \frac{20x32x30x(.01)^2x12}{\pi x.55x3.82x.042x6}$$

$$N = 14 \text{ RPM}$$

If SAE 10 were used $\mu = 80$ cs $= .124 \ in^2/sec$

Then:

$$N = 62 \text{ RPM}$$

These are representative operating speeds and at these speeds a stop watch is all that is necessary for measuring R.P.M. simply be counting the number of revolutions for a specified time interval.

Other operating conditions then become (still using SAE 10 oil):

<u>Load Capacity</u>

$$W = \frac{\mu \ U \ L}{M^2} (a-1)^2 C_w \quad \text{where } C_w = \frac{6}{(a-1)^2} \left[\ln a - \frac{2(a-1)}{a+1} \right]$$

$$C_w = \frac{6}{(2-1)^2} \left[\ln 2 - \frac{2(2-1)}{2+1} \right]$$

$$= .158$$

$$\mu = \rho \nu$$

$$= .9 \times .8 \text{ poise} \times 1.45 \times 10^{-5} \text{ reyN/poise}$$

$$= 1.04 \times 10^{-5} \text{ reyN} \quad \left[\frac{\text{lb-sec}}{\text{ft}^2} \right]$$

$$\text{i.e. } W = \frac{1.04 \times 10^{-5} \times (2\pi \times 1 \times 6) \times 2}{(.0026)^2} (2-1)^2 (.158)$$

$$= 18.3 \text{ lbs.}$$

To include the effect of side leakage

$$W = 18.3 \times .25 \text{ lb.}$$

$$W = 4.6 \text{ lbs.}$$

or:

Using equation from Fuller

$$W = \frac{6 \mu U B^2 l \eta}{h_2^2} k_p \quad \text{where } \eta = .25$$

$$k_p = .0261$$

$$= \frac{6 \times 1.04 \times 10^{-5} \times 2 \times 1 \times 6 \times (3.82)^2 \times 2 \times .25 \times .0261}{(.01)^2}$$

$$= 4.5 \text{ lbs.}$$

<u>Friction Force</u>

$$F_r = \mu L B \frac{U}{h^2} \times K_{fr} \quad \text{where } K_{fr} = .773$$

$$= \frac{1.04 \times 10^{-5} \times 3.82 \times 2 \times 2\pi \times 1 \times 6 \times .773}{.01}$$

$$= .23 \text{ lbs.}$$

Wear - Fretting

Fretting is a special type of wear between two surfaces caused by a slight cyclic motion of one surface over the other. It is perhaps not given enough attention in literature; however, it is a very important type of wear phenomenon. It manifests itself often on non-operating, but loaded bearings where the bearing environment may be moving. Also, within machines, pipings and/or linkages are often run close to each other, and subsequent operations bring them in contact. Then, pump or motor operations could easily start a cyclic movement between the surfaces and cause fretting. Loose bolts on operating machinery are also subject to fretting.

A fretting experiment was chosen for this series for two reasons. First, it exposes students to another important aspect of wear and secondly it is easy to adapt the experiment to the equipment required for the other experiments.

Fretting is considered to be an oscillatory motion of very small amplitude. The oscillatory motion produced in this device has a somewhat larger amplitude, but should nevertheless be of interest in instruction, provided the dimensions of the contact area between the test specimens are much larger than the oscillation amplitude.

Power

$$P = F\ U$$

$$= \frac{.23 \times 2\pi \times 1 \times 6}{12 \times 550}$$

$$= .0013 \text{ hp}$$

Running power is negligible, but much higher hp is needed for starting.

Flow Rate

$$Q = B\ L\ U_m\ C_Q \quad \text{where } C_Q = \frac{a}{a+1} = \frac{2}{3}$$

$$= \frac{3.82 \times 2 \times 2\pi \times 1 \times 6 \times .0026}{1} \times \frac{2}{3}$$

$$= .5 \text{ in}^3/\text{sec}$$

$$\approx 1 \text{ gallon every 10 minutes}$$

Thus to allow for extra flow which does not pass through the bearing we need approximately 1 gallon every 5 to 10 minutes.

The temperature rise for the power loss previously calculated is obviously negligible.

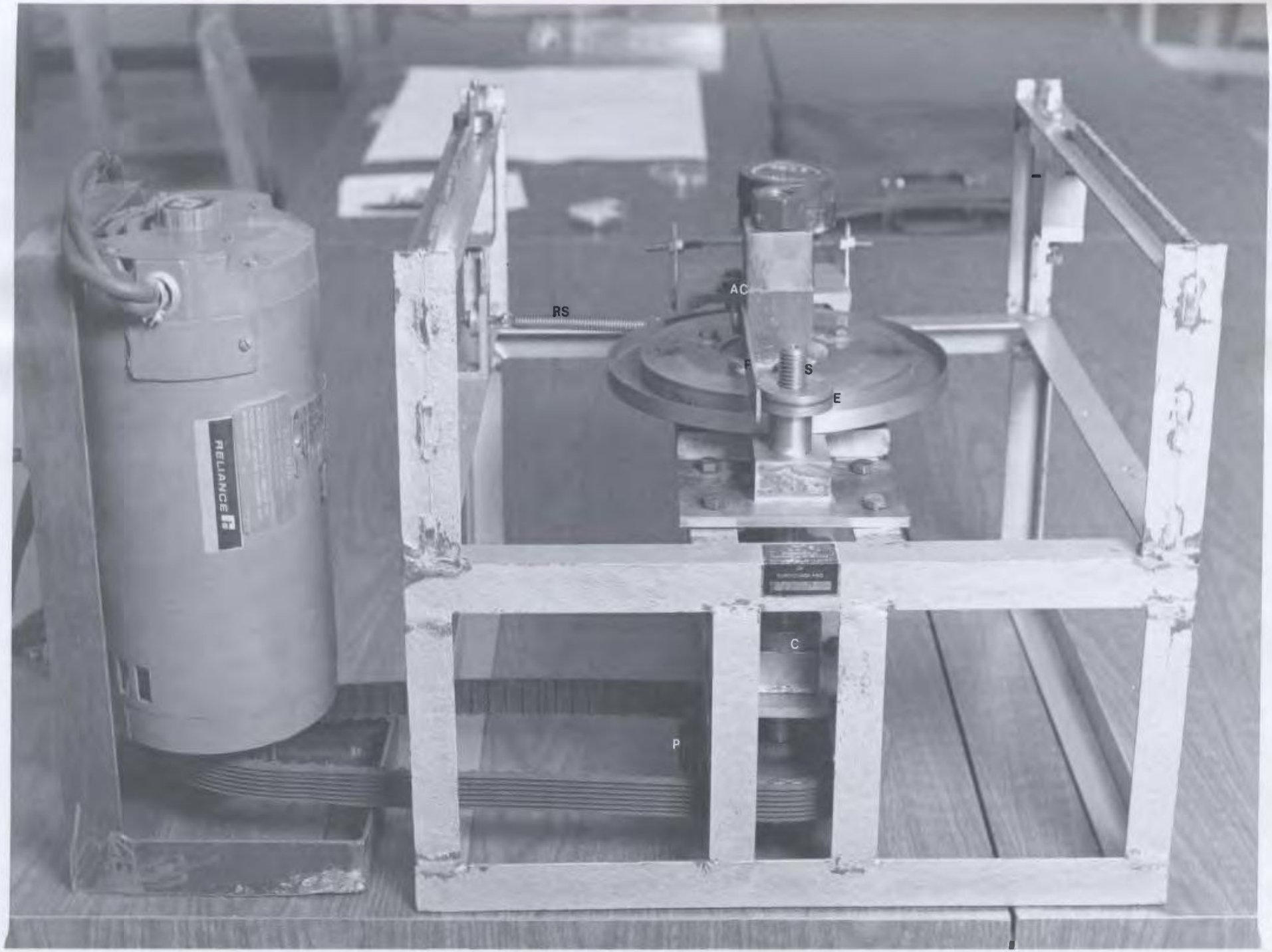

Figure 18 Fretting Apparatus

The pin and disc apparatus is used with a few additions.

Refer to Figure 18.

A second shaft (S) parallel to the main shaft is fitted to the frame and supported by two thrust collars (C) at the frame. It is driven from a timing pulley (P) on its lower end. An eccentric (E) is fixed to the upper end. A follower (F) is rigidly attached to the main shaft and as the second shaft rotates, the wear disc vibrates. A return spring (RS) is attached to the disc and fastened to the frame. An angle clip (AC) is bolted to either side of the holding bar to prevent any motion of the test pin during testing.

Considerations for the design are essentially geometric. No design data is available for such experiments, as far as the amount of wear is concerned in a fretting situation so initially the main concern is to get two fretting surfaces which can be analysed. Fretting wear rates, mode and debris can then be analysed in situations of particular interest to any experimenter.

With an eccentricity of .125 in and variable positioning of the wear pin, fretting amplitude can be varied from approximately .02" to .125".

Wear is measured as before and can be correlated to the number of cycles. Vibration speed can be set, if

necessary, at some multiple of usual pump and motor speed, i.e. 1750 rpm. In this way, wear (and failure) can be related directly to time.

4.3.3 Failure Apparatus - Four Ball Machine

Failure of rolling elements, both ball and roller, is a phenomenon which all mechanical engineers, technicians, and tradesmen must learn to live with. Repeated operations even under perfect conditions will eventually lead to fatigue failure. However, few bearings die what may be called a "natural" death. Operating conditions such as load and speed coupled with environmental conditions of lubricant viscosity (temperature), chemistry, cleanliness and appropriateness determine how long a bearing can function. A test rig is therefore desired to show the influence of these parameters on rolling element failure.

Since most of the parameters mentioned above are qualitative, or at least their dependencies are not clearly known quantitatively, then a test rig to produce accelerated failures with reasonable control over the variables is desired so that a student may observe failures caused by various sets of conditions.

Quantitatively, the time to some form of unsatisfactory operation may be taken as the measurable variable which can denote failure.

To perform failure tests on ball and roller bearing elements, experimenters are free to design rigs which use actual commercially available bearings or they may make their own configurations. Test rigs using actual bearings are typically designed to show friction characteristics of the bearings, and using such a rig as a failure machine would limit the tester to manufacturer's dimensioning and choice of materials. Also, after failure has occurred the elements would have to be removed from the case before examination.

In order to increase the versatility of the equipment so that more experiments can be performed experimenters use free rolling elements. The most popular of such equipment described throughout the literature is the modern four ball wear tester, or some variation of it. Its basic form is a pyramid of balls as shown in Figure 19. The upper ball is nested into and driven on three lower balls. The lower three run in a hardened race and may or may not be constrained in some manner, such as by the addition of cage material spacers. Of course, the complete assembly is encapsuled so that the environment can be controlled.

E.D. Brown[8] quotes Boerlage in 1933 as the original user and also states that there are approximately 400 such rigs in use around the world. His article gives a very brief description of the history of the four-ball apparatus and lists its essential features, along with its applications

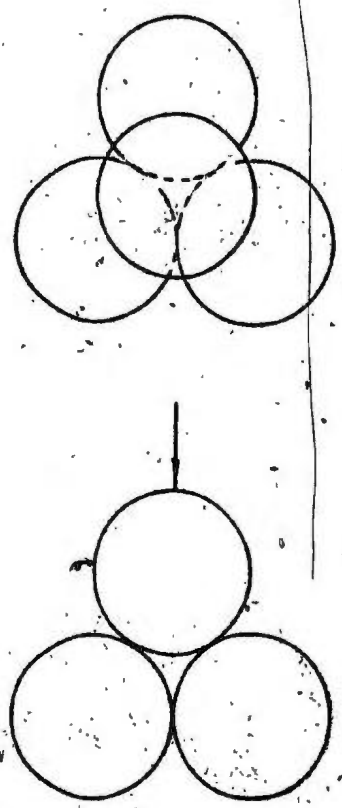

Figure 19 Conventional Four-Ball Configuration

to research problems.

Scott and Blackwell[69] describe the use of a four-ball machine to provide "accelerated service simulation tests for lubricants and materials for rolling elements". A very good description of their equipment is given, along with some results of their experiments which demonstrate the usefulness of their rig. Also mentioned is the cone/three-ball arrangement where the upper ball is replaced by a cone. The operation is similar, yet the cone can easily be fabricated - especially helpful if it is to be made of material which is not readily available in ball form.

T.E. Tallian[70] also gives a good description of a modern four-ball wear tester. His article is primarily concerned with the rolling contact failure theory and an excellent and concise precis of the topic is given. Also given is an extensive list of references, 63 in all.

At the teaching tribology conference[17] sponsored by the University of Leeds in 1970, Dr. Cameron of Imperial College revealed that a simple four-ball apparatus driven by a two speed electric drill was being used at his college and Mr. Watson of Warrington Technical College said that a rig similar to Dr. Cameron's was at use at Warrington. Also, a written contribution to the same conference by Mr. M.H. Jones of the University College of Swansea gives another interesting variation. It consists of a driven cone, but

instead of three balls it had three cylinders. Besides the ease of preparing these specimens, it allows the four-ball machine to be used as a pure wear tester.

In Canada, a four-ball rig designed especially for college laboratories is available from Experimental Engineering Equipment Limited in Ontario.

From the study of the literature, it was decided to design and construct our own four-ball machine.

The classical configuration is for the top ball to be fastened to the shaft and driven into the three nested balls. However, while searching for suitable ball and race material, it was discovered that a set of four small ball bearings nested perfectly into the top cup of a hydraulic valve lifter (which is already hardened) in an inverted position, i.e. the three balls on top of the one. This configuration was chosen and therefore the balls are driven by the flat ended hardened shaft. Test materials, both race and balls, are thus readily available.

The assembly shown in Figure 20 and described below was designed. The particular design decisions and calculations follow the description.

Assembly

See Figures 20 and 21.

A hardened race, (A) [valve lifter cup] is pressed into a brass cup (B) on a loading head (C). This loading

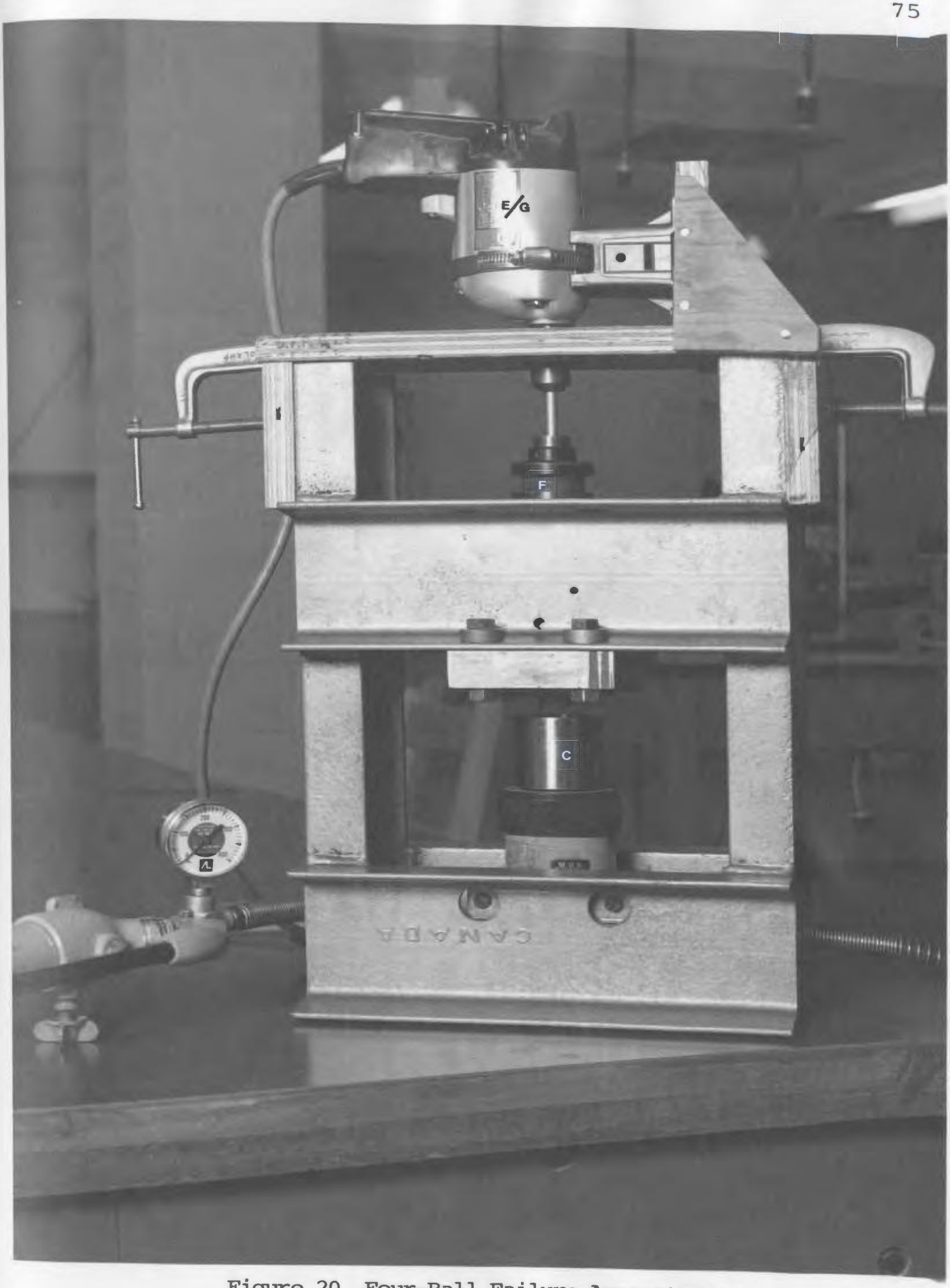

Figure 20 Four-Ball Failure Apparatus

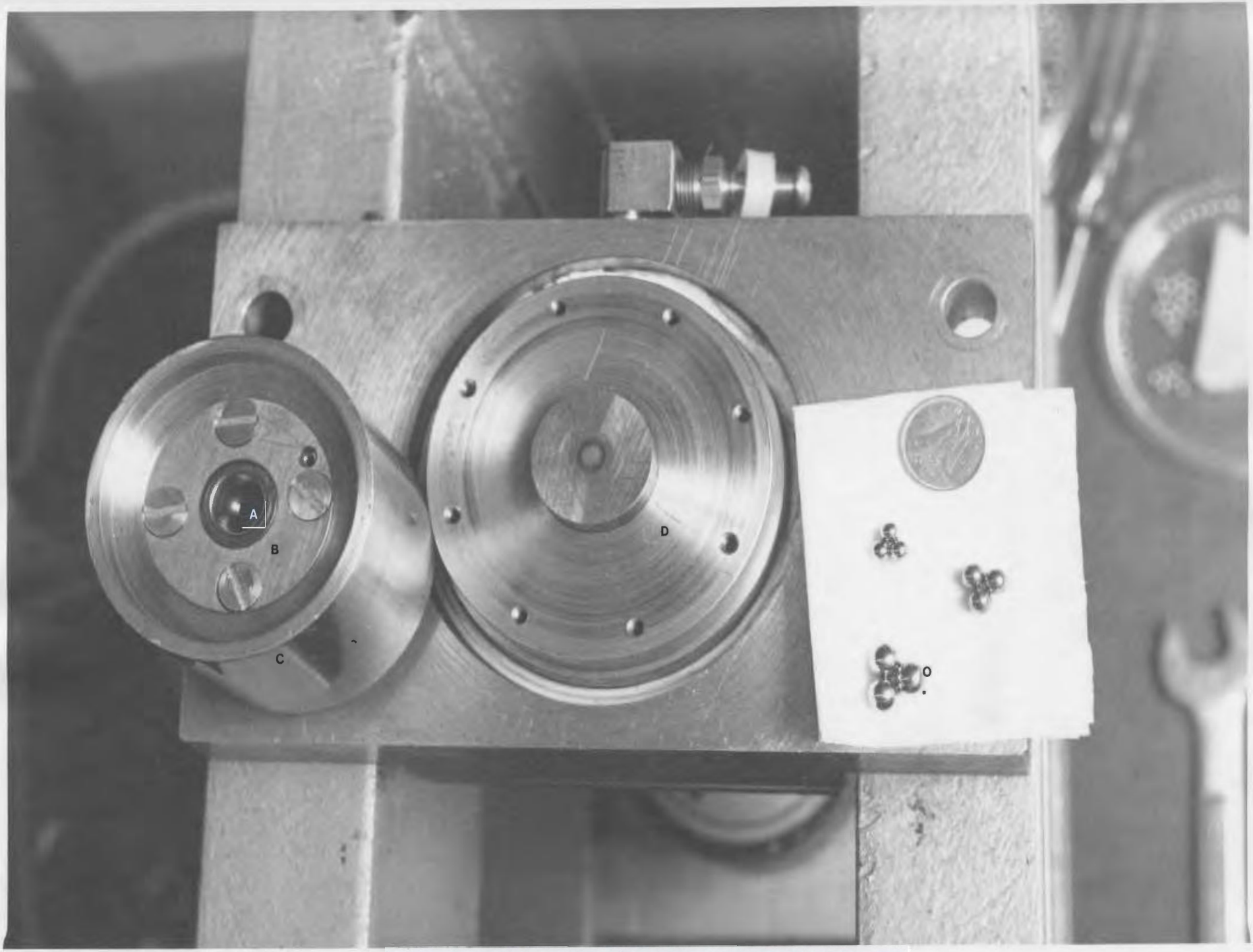

Figure 21 Loading Head and Shaft Assembly

Using a 3/16" ball, we find this is the one used for a deep groove single row ball bearing of the 200 series with a rated load of F_r = 805 lb at 1 Mr. This bearing contains 7 balls.

Stribeck's equation gives the most heavily loaded ball for the rated load as:

$$Q_o = \frac{4.37F_r}{N}$$

$$\therefore Q_o = \frac{4.37(805)}{7} = 502 \text{ lb.}$$

In this configuration, there are three such contacts. Now if we consider this to be the load required per ball to give B_{10} = 1 Mr, then we can decide on the load required for B_{50} or B_{90}.

Select a design life of 3 hrs @ 5000 rpm.

i.e. $B_{design} = 3 \times 60 \times 5000 = .9$ Mr.

If we want 50% failure in this time, then $B_{50} = .9$ Mr.

But $B_{50} = 5\ B_{10}$ [Some users prefer $4.08\ B_{10}$]

$$\therefore B_{10} = \frac{.9}{5} = .18\text{Mr}$$

This means that if a bearing has 90% survival at $.18M_r$, it has 50% survival at .9 Mr.

Since $F_r = [B_{10}]^{1/3} F_e$ where F_r = rated load

F_e = actual equivalent load

$$F_e = \frac{502}{[.18]^{1/3}} = 890 \text{ lbs.}$$

$\therefore$ Total design load = 3 x 890 = 2670 lbs.

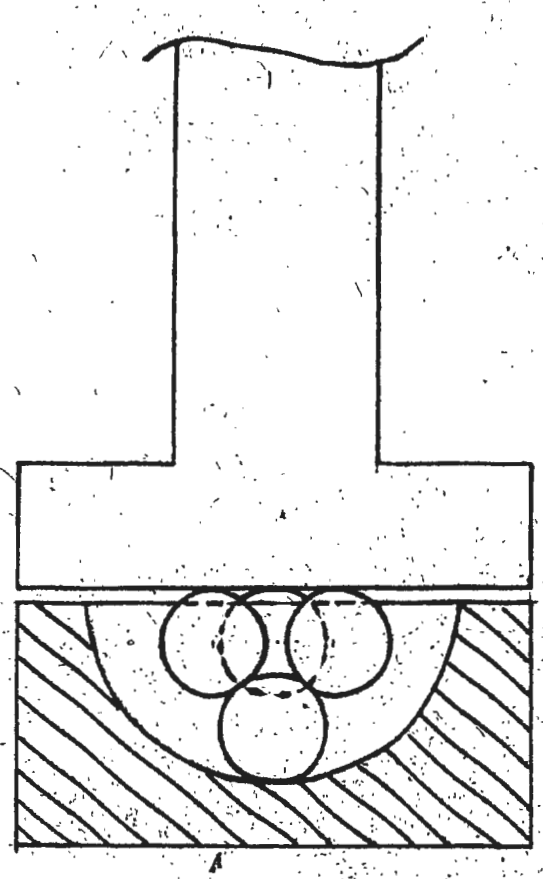

Figure 22 Inverted Four-Ball Configuration
(schematic only)

$$S \quad f\left(\frac{\lambda_o^{\,c} N}{Z_o^{\,h}}\right)^{e} V$$

where S = cumulative probability of failure

f = exponential function

λ_o = max. alternating stress

Z_o = depth of λ_o

N = number of cycles

V = scaling factor

c, h, e = constants

Experimental study has provided values of the constants needed for the distribution. Hertzian contact stress theory can be used to obtain values of λ_o and Z_o.

The problem here is to decide on the load required to give accelerated failure with life periods short enough to allow the time for student laboratory experiments. However, our configuration (Figure 22) is certainly not like any conventional bearing configuration and therefore the experimental design data available is not really applicable here.

The machine being designed will therefore have to be used as a comparative device and the failure criteria will have to be established against standard oils.

The design load decided upon here will be of order of magnitude only.

As an initial estimate, let us compare a ball in this configuration to one in a standard bearing.

head is put into a hydraulic ram which is secured to the frame as shown. Test balls, (O) are placed into the cup and the ram is raised into contact with the shaft end. A protective case surrounds the balls and is filled with the test oil. The shaft (D) is supported by two radial bearings and one pure thrust bearing. It is connected to the motor (E) by a flexible coupling (F). Final testing was performed using the electric drill shown (G), but the original intention was to use a vacuum cleaner motor and control the speed through a variac. Further discussions on this will be found in the test results.

Provisions can be made for the addition of heater blocks in the contact zone. Also, probes for contact resistance measurements and revolution counts may also be added.

Load Analysis

The failure of rolling elements is a complex phenomenon. If a bearing receives "proper" attention, then the failure will ultimately be due to fatigue and the nature of the failure will follow a statistical distribution. Much study and experimentation has been done to provide design data on the load-life relationships for bearings. Lundberg and Palmgren[61] proposed the following distribution:

If one wishes to design for 10% survival, i.e. B_{90}, the Weibull distribution must be used.

$$\frac{B}{B_{10}} = \left[\frac{\ln[1/p]}{\ln[1/p_{10}]}\right]^{1/b} \quad \text{where } b = 1.2$$

B_{10} is desired if $B_{90} = .9M_r$

$$\frac{.9}{B_{10}} = \left[\frac{\ln(1/.1)}{\ln(1/.9)}\right]^{\frac{1}{1.2}}$$

$$B_{10} = .069\,M_r$$

$$F_e = \frac{F_r}{[B_{10}]^{1/3}} = \frac{502}{(.069)^{1/3}} = 1225 \text{ lb.}$$

$\therefore$ Total load = 3 x 1225 = 3675 ≈ 4000 lb.

4000 lb. was taken as the design load, but further developments showed the following approach would have been closer.

Hertz stress in the contact zone:

Allan[2] gives the solution to the Hertz equations for the contact stress between a ball and flat plate to be:

$$P_{max} = \frac{1.5\ P'}{\pi\ a^2}$$

where P_{max} = maximum contact stress

P' = load (Kg)

and $a = .0318\sqrt[3]{P'/d}$

a = radius of contact circle (mm)

d = ball diameter (mm)

For this rig $d = 3/16$ "

Substituting into the equation and converting the units, the equation becomes:

$P_{max} = 1.9 \times 10^5 \times \sqrt[3]{P}$ where P_{max} is in lb/in^2

P is in lb.

∴ The design load will give

$$P_{max} = 1.9 \times 10^5 \times \sqrt[3]{1225}$$

$$= 2 \times 10^6 \text{ psi}$$

Some other ball loads and contact stresses are tabulated below.

Load per ball, P, Lb	P_{max} [psi x 10^{-6}]
1225	2.06
1000	1.92
500	1.53
100	.89
50	.71
25	.56

For the reference ball, in the 200 series bearing, we could expect a stress of the order of 500,000 psi which is taken by some bearing manufacturers as the limiting design stress for their bearings.

∴ 25 lb/ball is the load to give equivalent conditions in this rig as in the reference bearing. The result is then:

$$F_e = \frac{25}{(.18)^{1/3}} = 44 \text{ lb for 50\% survival}$$

$$\text{and } F_e = \frac{25}{(.069)^{1/3}} = 61 \text{ lb for 10\% survival}$$

i.e. total loads of 130 lb to 180 lb respectively.

Also, Goodman (in 2) points to the fact that 3 point contact (this configuration) leads to quicker failure than 2 point contact (the reference ball). Again the fatigue life would be expected to be lower.

No consideration has been given to the possible effects of the lubricants, which will affect the ball life.

For their rig, Scott and Blackwell[69] use maximum Hertz stress of 500 ton/in^2 (10^6 psi) in a conventional four-ball machine to give failure times from 10 to 180 minutes at 1500 rpm, depending on the lubricant. For this rig, this corresponds to a single ball load of 140 lb or a total load of 420 lbs.

One could expect, therefore, results close to these.

The foregoing results did not necessitate a change of the design load, since it was considered desirable to have an excessive load capacity for several reasons.

Firstly, it is much more convenient to speed up the test by increasing the load if it becomes necessary, since time is important to the students. Secondly, should an experimenter decide to increase the ball size, the load carrying capability will be available on the bearings of the rig and the frame, and only the holding cup will need to be changed. For example, if 1/2 in. balls (usual 4-ball size) are used, the load carrying capacity would be expected to increase by a factor of:

$$\left[\frac{1/2}{3/16}\right]^{1.8} \approx 6$$

Thirdly, because of the nature of the tests being conducted shock loads can be expected and again the extra capacity will be helpful.

The most convenient way of attaining loads of this order of magnitude with good control is to use a small hydraulic jack. The load being applied can then be calibrated directly on a pressure gauge.

In order to make the rig portable, the ram is placed inside a reaction frame, such that all forces remain inside the unit. To accommodate the ram dimensions, at least a 4"

space is needed.

Frame analysis and bearing selection follow.

Bearing Selection

The bearing should be able to support the total thrust load plus any radial load which might be encountered because the load is not directly along the center line of the axis. It is easier to design for the eccentricity, than to design for near perfect center line loading. Absolute maximum eccentricity would never be greater than .125 inches but it could temporarily be this high if one of the balls should spall or fail completely and cease to be a load carrying member.

Therefore, the bearing layout will have to allow for both radial and thrust load. The load here could be taken with pure thrust and two radial bearings or combined radial-thrust bearings (i.e. angular contact). The possibility of eccentric end loading eliminates consideration of journals for the radial load.

The complete arrangement has to be compact in order to fit into the allowable space, i.e. the 4-inch width of the channel.

If angular contact bearings are used, the configuration would have to be as shown in Figure 23. Since angular contact bearings are primarily for radial loads, in

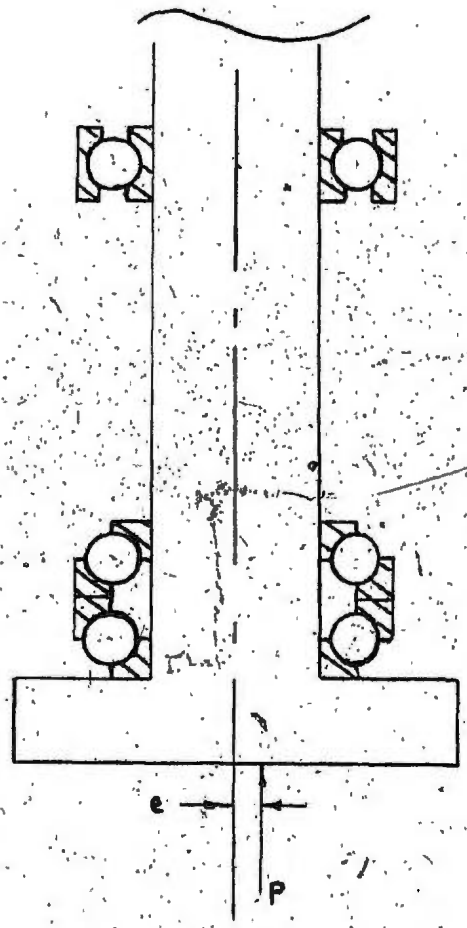

Figure 23 Bearing Arrangement Using Angular Contact Bearings
(schematic only)

order to get the necessary bearing rating desired for this job, very large bearings would be required. This is unacceptable and therefore a pure thrust bearing must be incorporated. The configuration then becomes as in Figure 24.

The dimension A will be kept as small as possible so that both radial bearings can be housed in the same block.

Thrust Bearing

The expected life would have to be at least long enough for 100 experiments, 3 hours long each; i.e.

$$B = 3 \times 100 \times 5000 \times 60$$
$$= 90\ 000\ 000 \text{ rev}$$
$$= 90 \text{ Mr}$$

From the design nomogram for a ball bearing with life 300 hrs at 5000 rpm

$\frac{C}{P} = 4.5$ where C = basic dynamic load rating
P = equivalent load

For the thrust bearing, this gives

$$C = 4.5 \times 4000 = 18{,}000 \text{ lbs.}$$

The SKF flat seat roller thrust bearing of smallest I.D. with this dynamic capacity is SKF 51408 with the following nominal dimensions.

d	D	H	C
1.5748	3.5433	1.473	19300

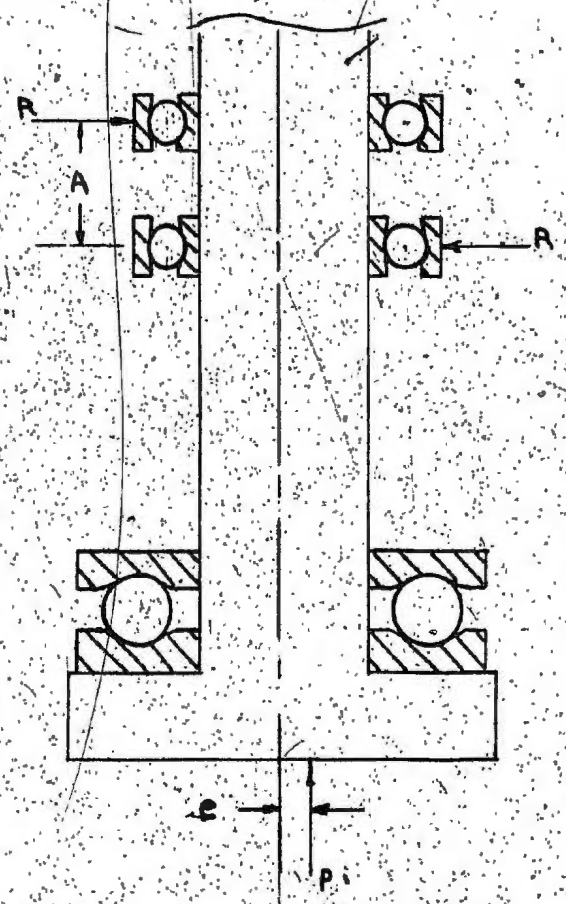

Figure 24 Bearing Arrangement with Pure Thrust Bearing (schematic only)

This is a very large bearing compared to the overall dimensions of the rig. If a design load of 3000 lb were used instead

$$C = 3000 \times 4.5 = 13{,}500 \text{ lb.}$$

Bearing 51406 would satisfy this with the following:

d	D	H	C
1.1811	2.7559	1.1024	12500

This bearing is much more acceptable as far as size is concerned. If it were used and run at 4000 lb, B_{90} would be:

$$\frac{C}{P} = \frac{12500}{4000} = 3.125$$

$$B_{90} = (3.125)^3 = 30 \text{ mr} \approx 35 \text{ experiments}$$

This is hardly acceptable and the rig would definitely have to run with a thrust of 3000 lbs or less.

The experiment time for 90% failure then becomes:

$$B_{10}^{1/3} = \frac{F_r}{F_e} = \frac{805}{3000/3}$$

$$B_{10} = .52$$

From the previous calculations $B_{90} = 13.1 \times .52$

$$= 6.8 \text{ mr.}$$

In terms of hours

$$T = \frac{6\ 800\ 000}{5000 \times 60} = 22 \text{ hours.}$$

Again this is unacceptable.

In order to keep the size of the rig small yet give reasonable experiment times, we can use smaller balls in the cup. The dynamic capacity of a ball is proportional to the 1.8^{th} power of its diameter. Therefore, if $1/8$ in diameter balls are used in the tester, the dynamic capacity is reduced by

$$\left[\frac{1/8}{3/16}\right]^{1.8} = .48$$

Hence the required load becomes 4000 x .48 ≃ 2000 lbs.

The life with 51406 then becomes:

$$\frac{C}{P} = \frac{12500}{2000} = 6.25$$

and B_{10} = 480 hrs. which is completely acceptable.

Radial Bearing

If dimension A = 2" [Figure 24] then

$$R \times 2 = .125 \times 4000$$

$$R = 250 \text{ lbs.}$$

For 400 hrs. @ 5000 rpm $\frac{C}{P} = 5$ ∴ $C = 5 \times 250$

$= 1250$ lbs.

The most appropriate size bearing with this capacity is SKF 6003. To avoid a separate lubricating system, the pre lubricated life time sealed type was used.

i.e. 6003/2 RS

d (in)	D (in)	H (in)
.6693	1.3780	.3937

The stress analysis can now be done.

Lubrication

The radial bearings are purchased life time lubricated and sealed. The thrust bearing must, however, be lubricated. Apart from obvious considerations of cleanliness, and unless special environmental problems are involved, the oil selection for ball bearing is not really critical, as long as an adequate supply is provided. This amount need not be large and in fact for high speeds it should be kept low to avoid churning and overheating. As a guide to the lubricant selection, the product speed (rpm) x bearing diameter (mm) is used. Using the original design speed of 5000 rpm, the product ND = 30 x 5000

= 150,000

From Figure 16, p. 19-11 of O'Connor and Boyd,[59] the recommended viscosity (at 100°F) would be 15 cs. If 1000 rpm is used, which was discovered to be sufficient during testing, then ND = 30,000 and the recommended viscosity becomes 55 cs. These figures suggest an oil somewhere between a very light turbine oil to SAE 20, depending on the speed the operator wishes to run the rig.

The bearing is not sealed in order to reduce the friction load on the motor, and to keep the assembly simple. For this reason, only small amounts of oil must be used. This can be accomplished using a felt wick and cup dispenser. Although the wick and cup was not used on the prototype, it is shown on the drawing.

Bearing Plate Analysis

The bearing plate can be considered a beam clamped at both ends, and therefore is statically indeterminate. The general solution for the reactions at the ends, A and B, for such a beam of length, l, with point loading, P, is given as:

(1) $R_A = R_B = \frac{P}{2}$

(2) $M_A = M_B = \frac{Pl}{8}$

With P = 4000 lb and l = 4 in, then:

$R_A = R_B = \frac{4000}{2} = 2000$ lb

$M_A = M_B = \frac{4000 \times 4}{8} = 2000$ in-lb.

The shear and bending moment diagram is shown in Figure 25.

Since the length is so short, the stress will have to be checked for both shear and bending.

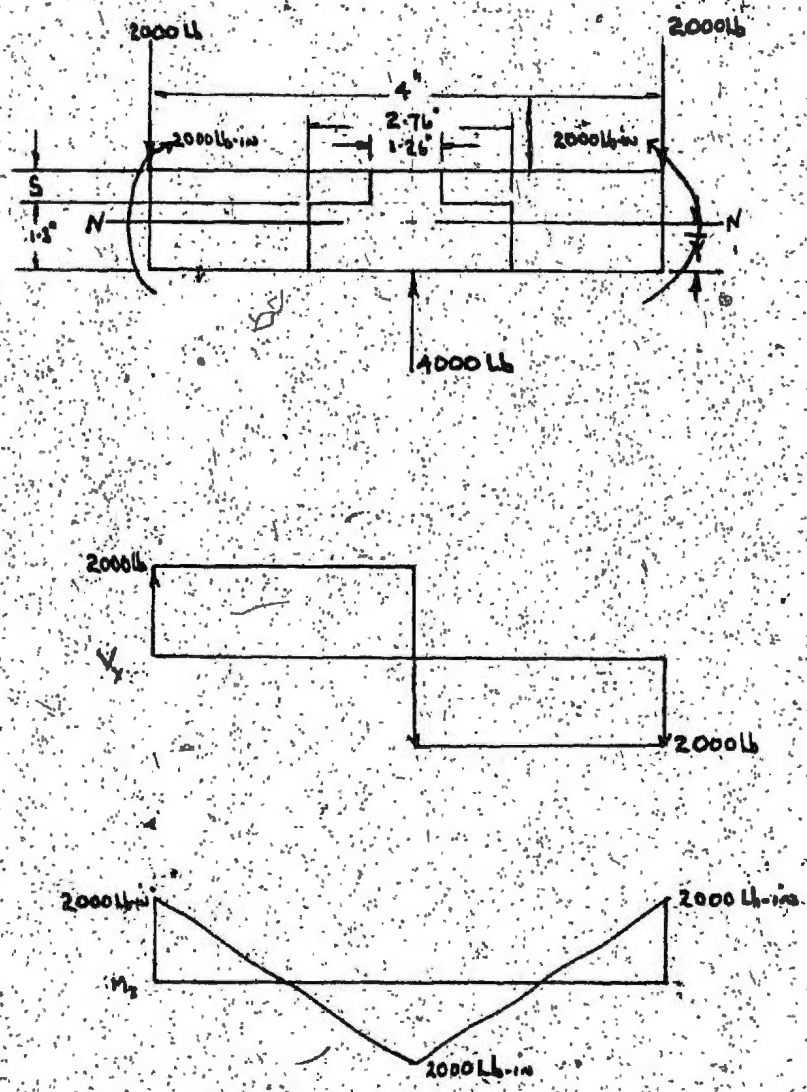

Figure 25 Loading for Bearing Plate

The critical dimension will be the shoulder depth to support the thrust (dimension S in Figure 25).

Try S = .5 in.

then $\bar{y} = \frac{\Sigma\, y_i\, A_i}{\Sigma\, A}$

$= \frac{3.17\ \text{in}^3}{2.98\ \text{in}}$

$= 1.06\ \text{in}$

and from the moment of inertia for a rectangular area

$I_{NN} = \frac{bh^3}{12}$ with the parallel axis theorem ($I_{x'x'} = I_{xx} + A\,d^2$)

we get $I_{NN} = .88\ \text{in}^4$

Also the statical moment $Q = .70\ \text{in}^3$ with $b = 1.06$ in

$\tau_{max} = \frac{V\,Q}{I\,b} = \frac{(2000)(.7)}{(.88)(1.06)} \approx 1500$ psi

For bending

$\sigma = \frac{MC}{I} = \frac{(2000)(1.8-1.06)}{.88} = 1680$ psi

For plate steel, the yield strength $S_y = 50{,}000$ psi and the shear strength can be taken as $.6\,S_y = 30{,}000$ psi.

The factor of safety on shear $= \frac{30{,}000}{1{,}500} = 20$*

* Note: There is no need to consider a stress concentration factor at the corner because it is a steady load on a ductile material.

The thickness could be reduced, but since the cost saving would be insignificant we can maintain the .5 in thickness.

Frame Cross Member Analysis

Two 4" M.S. channel cross members support the total load. Each will therefore carry a central load of 2000 lb. The loading, shear and bending moment diagrams are given in Figure 26.

$$R_A = R_B = \frac{P}{2} = 1000 \text{ lbs}$$

$$M_A = M_B = \frac{Pl}{8} = \frac{2000 \text{ lb} \times 8.75 \text{ in}}{8}$$

$$= 2200 \text{ in - lb.}$$

Maximum bending stress $\sigma = \frac{MC}{I}$

$$= \frac{M}{Z}$$

$$= \frac{2200 \text{ in-lb}}{1.9 \text{ in}^3}$$

$$= 1200 \text{ psi.}$$

This is negligible.

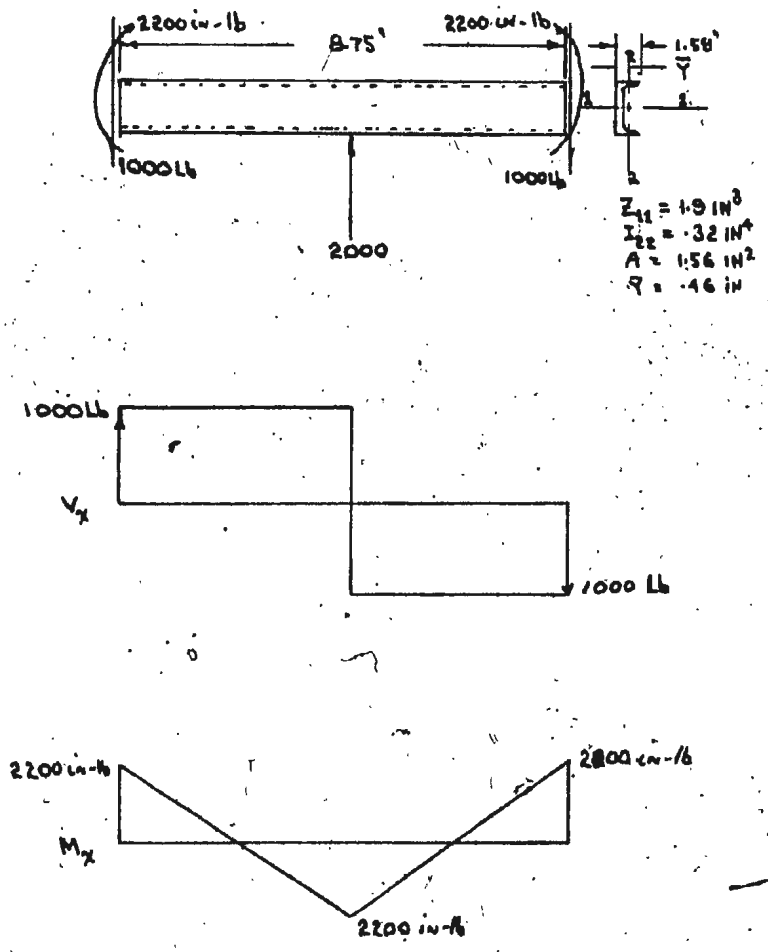

Figure 26 Loading for Frame Cross Member

Vertical Member

The vertical members are also 4" channel. Each member will have to take the reactions from the cross-members, which include a tensile load and a bending moment as shown in Figure 27. The maximum tensile stress will be the direct tensile stress plus the stress on the tension side of the beam due to the moment.

Tension in top fibers due to bending:

$$\sigma = \frac{MC}{I}$$

$$= \frac{4200 \text{ in-lb} \times .46 \text{ in}}{.32 \text{ in}^4}$$

$$= 6000 \text{ psi}$$

Uniform tensile load

$$\sigma = \frac{2000 \text{ lb}}{1.56 \text{ in}^2} = 1300 \text{ psi.}$$

Total stress = 6000 + 1300 = 7300 psi.

Using a yield strength of 50,000 psi for steel, the factor of safety becomes

$$N = \frac{50,000}{7,300} \approx 7. \text{ This is sufficient.}$$

Power Requirements

The power required will be that necessary to drive the balls in the cup along with friction in the bearings. The friction in the thrust bearing will by far be the largest. Faires[33] gives the coefficient of friction at the shaft diameter for ball thrust bearings as .0013. This

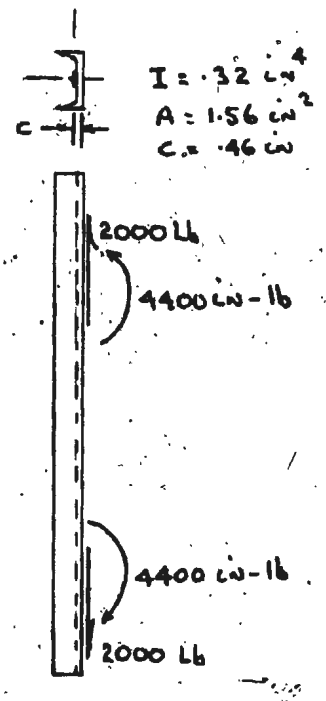

Figure 27 Loading for Vertical Member

gives the power as:

$$Hp = \frac{T\ N}{63{,}000} \qquad \text{where } T = \text{in-lb}, \quad N = \text{RPM}$$

$$= \frac{(4000 \times .0013)\left(\frac{1.26}{2}\right)(5000)}{63{,}000}$$

$$= .05 \text{ hp.}$$

Any remaining power requirements will be small compared to that in the thrust bearing which is itself very small. The speed, 5000 rpm was chosen as a practical design speed which can give failure in a reasonable amount of time. There are several commercially available motors from power tools which are inexpensive and suitable. A .5 hp, vacuum cleaner motor, capable of approximately 10,000 RPM was chosen. It is a universal motor and can therefore be speed controlled with a variac.

Note: This proved to be a rather unfortunate choice, since the fan had to be removed from the motor in order to mount it. Of course, with the fan's cooling effect gone, the motor continually overheated, and it was impossible to run the machine loaded for any period of time or at high speeds at all. Fortunately, the speed and failure time estimates were high, and it was possible to get satisfactory failures with a 3/8 hp drill driven at 800 rpm. A better choice may have been a common handyman's router, but the drill was available at the time and it performed well.

Shaft Design

The selected bearings determine the shaft diameters. The shaft shape and nominal dimensions are shown in Figure 28. The critical loading is from the test balls and the thrust bearing reaction. This can be considered a point load P at the centre of the shaft and a distributed line load along a circle at the centre of the bearing surface. An expression must be obtained for the bending moment along the shaft radius.

Take an elemental ring dr as shown in Figure 28.

Letting the moment at r be M_r, then at r + dr, the moment is $M_r + dM$. Summing the moments on this ring, one gets:

$$M_r = M_r + dM + Pdr$$

$$dM = -Pdr$$

$$M = -pr + c$$

But $M = 0$, when $r = r_o$

$$\therefore \; c = Pr_o$$

i.e. $M_r = P(r_o - r)$

If P = 4000 lb, then at the root, R,

$$M_r = P(r_o - r)$$

$$= 4000(.92 - .6)$$

$$= 1280 \text{ lb-in}$$

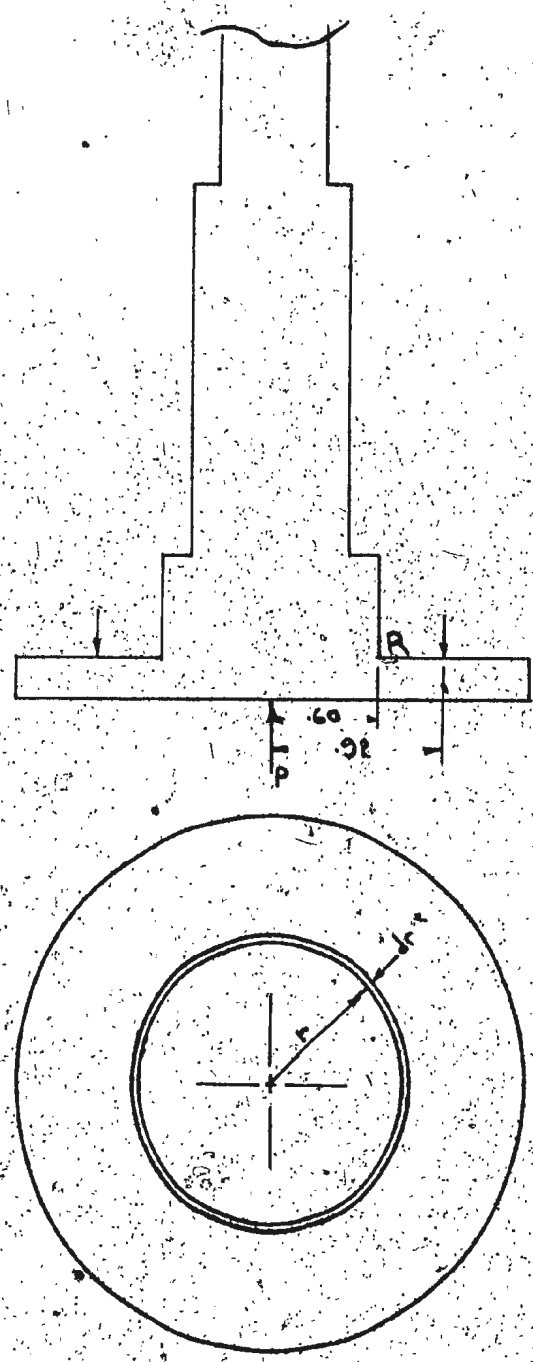

Figure 28 Flange Loading for Four-Ball Shaft
(schematic only)

The moment of inertia I for this section is obviously that of a rectangular section of base $2\pi r$ and height equal to the flange thickness.

$$I = \frac{bh^3}{12}$$

$$= \frac{2\pi(.6)(.375)^3}{12}$$

$$= .01656 \text{ in}^4$$

The bending stress therefore becomes:

$$\sigma = \frac{MC}{I}$$

$$= \frac{(1280)(.375/2)}{.01656}$$

$$= 14500 \text{ lb/in}^2$$

In addition, there will be a shear stress, S_s, at this section.

$$S_s = F/A$$

$$= \frac{4000}{(2\pi)(.6)(.375)}$$

$$= 2800 \text{ lb/in}^2$$

Using maximum shear stress theory of failure (ductile) and taking $S_y = 50{,}000$ psi, one gets from:

$$\frac{1}{N} = \left[\left(\frac{S}{S_y}\right)^2 + \left(\frac{S_s}{S_y/2}\right)^2\right]^{1/2}$$

$$\frac{1}{N} = \left[\left(\frac{14500}{50{,}000}\right)^2 + \left(\frac{2800}{25{,}000}\right)^2\right]^{1/2}$$

$N = 3.2$ satisfactory

The loaded end of the shaft had to be hard enough to act as a bearing surface. This was accomplished by pressing an insert of hardened steel into the end of the shaft. Atlas kk hardened to Rockwell c 63 was used.

Failure Measurement

It was hoped initially to detect failure by measuring the increased torque resulting from the higher friction of failed balls. Two methods were attempted: the first using a slight shear pin which supposedly failed when the friction became too great and the second was an electromagnetic motor starter which supposedly cut off when the supply current increased again because of the friction increase. Neither method proved practical for this rig.

It was then decided to rely on the noise levels of the failed balls and this proved very successful. The unaided ear was able to detect the failure of balls by a very sharp click at the time of failure. This requires constant vigil by the operator, however, but if one desired something more elaborate, an acoustical pickup could be used to monitor the noise level and provide automatic control. Oscillations in the loading head pressure also gives an indication failure has taken place.

5.0 EVALUATION

5.1 Operation Tests and Performance

5.1.1 Test Run Novel Coefficient of Friction Device

Procedure and Comments

The device was set up and the experiment to measure the coefficients of friction for various materials was conducted. Five materials (Brass; Mild Steel; Aluminum; Nylon; Teflon) were tested. Since the test pieces are made in both pin and bar form, the coefficient values are entered in the table to reflect which form the materials have for the run. Each square of the table contains three blocks as shown in Figure 29. The lower left block contains the values with the ordinate material in pin form and the abscissa material as the bar. The lower right block contains the value for the opposite situation and the top contains the average.

Results

A total of 4 values were obtained for each combination of materials; each material being in bar form twice and in pin form twice. These are shown in Table 1

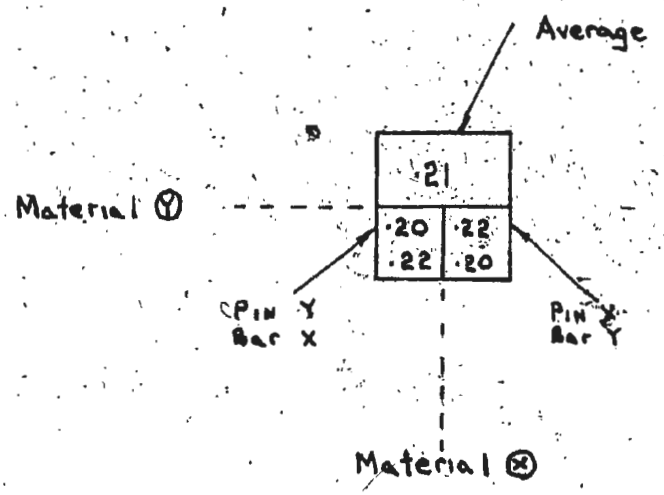

Figure 29 Recording Scheme - μ - device

Table 1

Coefficient of Friction Test Results

	Brass		M.S.		Aluminum		Nylon		Teflon	
Brass	.25									
	.24 .25	.25 .25								
M.S.	.22		.23							
	.22 .23	.22 .22	.22 .24	.23 .23						
Aluminum	.23		.23		.23					
	.24 .24	.22 .22	.24 .23	.24 .23	.23 .23	.23 .23				
Nylon	.23		.22		.23		.21			
	.20 .20	.25 .26	.18 .20	.26 .25	.23 .25	.20 .23	.22 .19	.20 .22		
Teflon	.17		.16		.17		.17		.10	
	.18 .19	.15 .15	.17 .16	.15 .15	.18 .20	.15 .15	.19 .16	.16 .17	.10 .11	.10 .07

Left - Bar
Right - Pin

Discussion

The first attempt at the experiment yielded values which were inconsistent. The reason for this appeared to be dirty surfaces and after the surfaces were cleaned (metals sanded and the plastics washed) the scattering of results decreased. Occasionally, because of sticking, a value was obtained which was higher than usual and the experimenter has to be on guard for this occurrence.

The values themselves are very interesting. The relative values are according to expectation; i.e. metal on metal higher than plastic on plastic, but all values are lower than the usual value of about .3 for most materials quoted in handbooks.

Consistency within a run was checked by taping a sheet of paper on the tray and marking the position of the holder at various trolley locations.* Figure 30 is the result of such a test and as can be seen, the holder moves in a near perfect straight line.

There also appears to be a time dependency for the values. The results obtained on different days differ slightly. This is also possibly due to changes in the

* This is a convenient way of conducting the experiments, since the scale and starting position can be drawn on beforehand, thus eliminating the need for the scale on the tray.

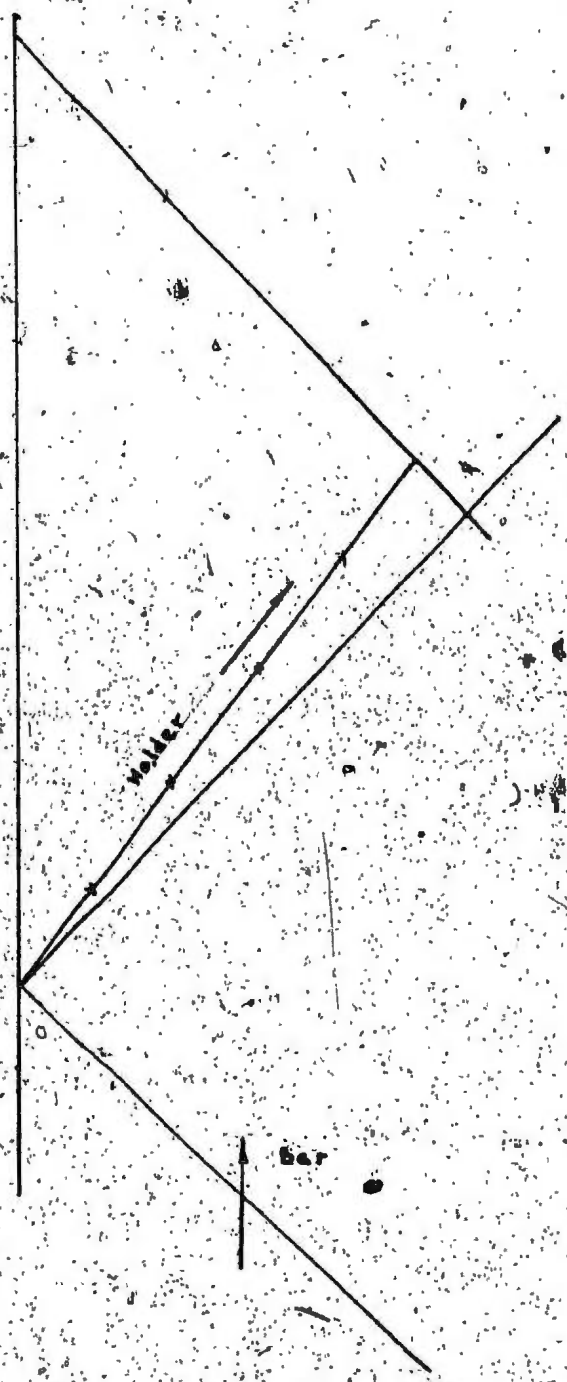

Figure 30. Consistency Check - μ - device

surfaces as a result of oil films and oxides on the specimens. For consistent results each specimen should be thoroughly cleaned and degreased.

The experiment was also conducted with the trolley accelerating (hard push with the hands), but the effect on μ was negligible.

5.1.2 Test Run Pin and Disc Machine

Procedure and Comments

The apparatus was set up according to the instructions given in the laboratory experiments section. Using a stroboscope, the motor was calibrated and the calibration curve is given in Figure 31.

For the trial runs a soft steel disc was used while a suitable hardened steel disc was being prepared. An 8" circular saw blade (hardness Rockwell C-63) with the teeth ground off was eventually prepared as a suitable wear disc but neither experiment has been conducted with it yet, and the results given here are for the soft steel disc.

Also the strain gauge circuit was not set up for this run and only the wear measurements were made.

Test pins of aluminum, brass, mild steel and nylon were used for this test.

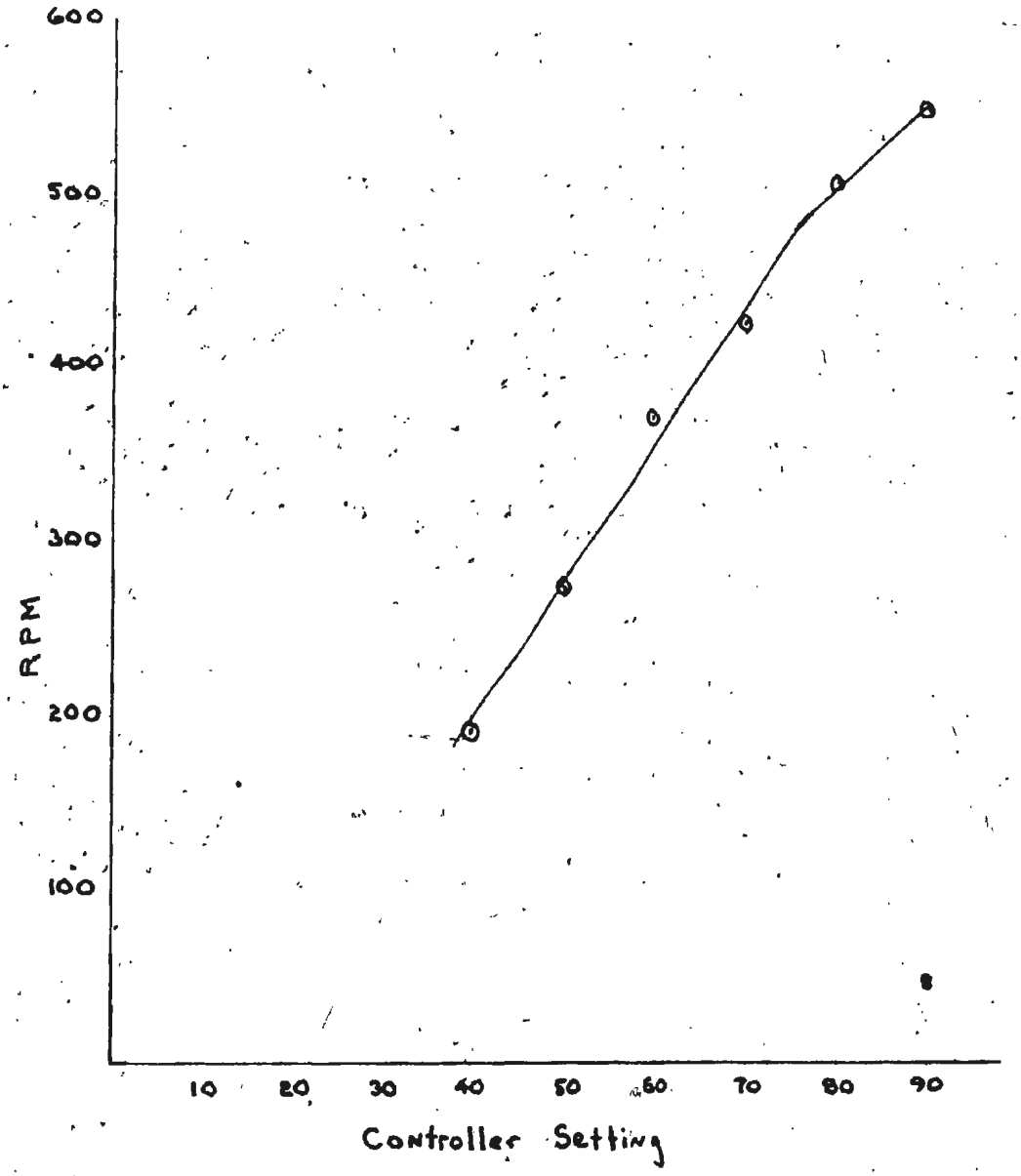

Figure 31 Motor Calibration - Tribo-demonstrator

Data for Motor Calibration Dec /75

Controller Setting	RPM No Load	RPM 1 Kg
10		
20		
30		
40	187	195
50	295	284
60	377	375
70	451	455
80	515	515
90	552	550
100		

Results

The wear rates for the aluminum and brass were severe while the nylon showed no appreciable wear for the duration of the test. No results were obtained for the mild steel since it turned out to be harder than the disc and it was the disc which wore. The data is given below and plotted in Figure 32.

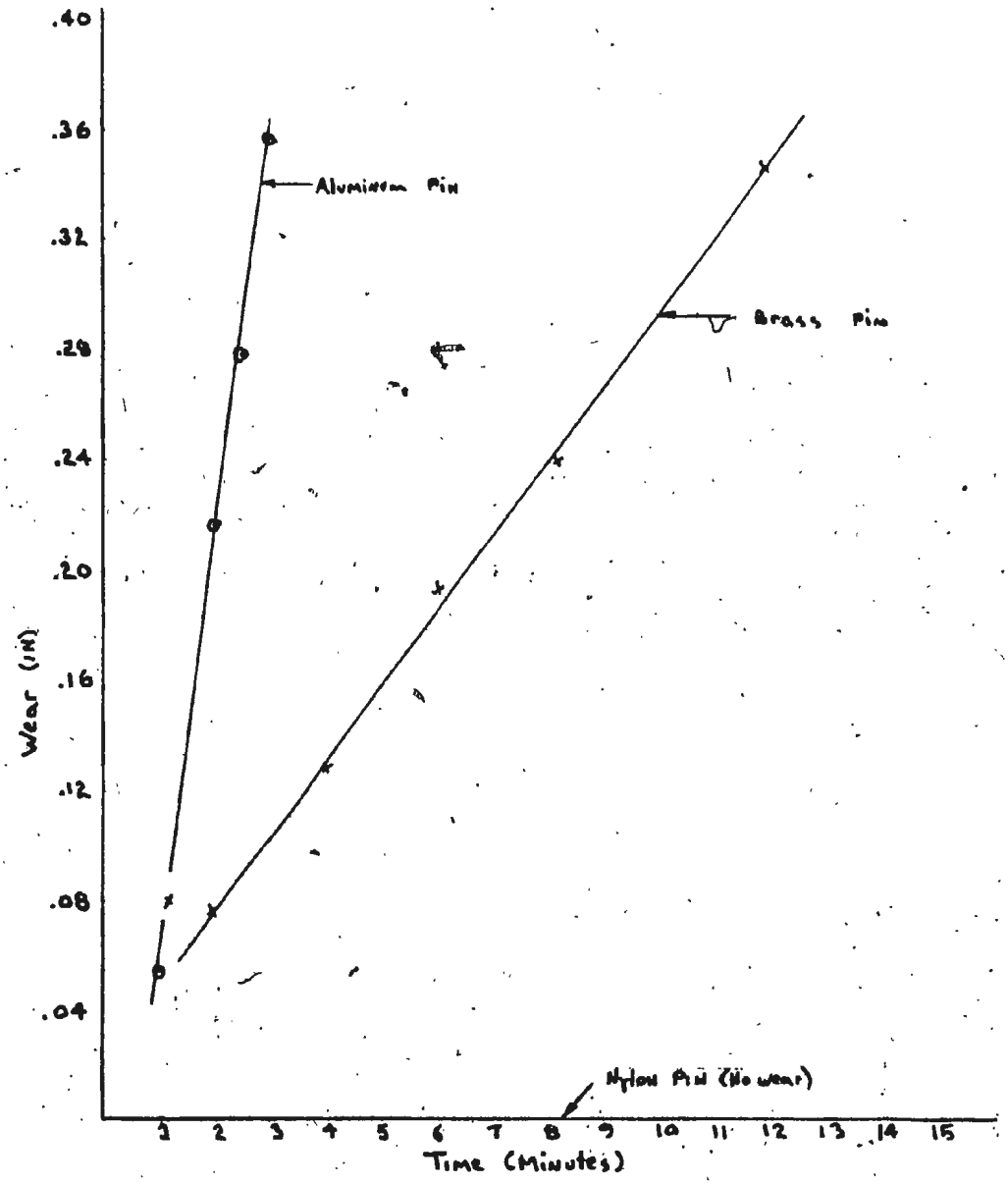

Figure 32 Wear Test Results

Test Run # 1

Materials aluminum pin on mild steel disc

Load 1 kg (2.2 lb)

Speed 375 rpm (Setting 60)

Original Length 1.49 in

Time	Length (inches)	Amount of Wear (inches)
0	1.49	
1 min	1.43	.06
2 min	1.27	.22
2 1/2 min	1.21	.28
3 min	1.13	.36

Test Run # 2

Materials brass pin on mild steel disc

Load 1 kg (2.2 lb)

Speed 390 rpm (setting 65)

Original Length 1.50"

Time	Length (inches)	Amount of Wear (inches)
0	1.50	
2 min	1.42	.08
4 min	1.37	.13
6 min	1.31	.19
8 min	1.26	.24
10 min	1.20	.30
12 min	1.16	.34

Test Run # 3

Materials mild steel pin on mild steel disc

Load 1 kg (2.2 lb)

Speed 375 rpm (setting 60)

Original Length 1.508 inches

The steel pin proved too hard for the disc and the test could not be completed.

Test Run # 4

Materials nylon on mild steel

Load 1 kg (2.2 lb)

Speed 375 rpm (setting 60)

Original Length 1.508"

After 30 minutes no measurable wear had taken place in the pin.

Discussion

The wear apparatus performed satisfactorily for the above experiment and acceptable results were obtained; from the graph wear rate is obviously proportional to the sliding distance. The wear mode for the aluminum and brass was obviously severe, which is expected for such materials running on dry mild steel. Figure 33 is a picture of the wear specimens used.

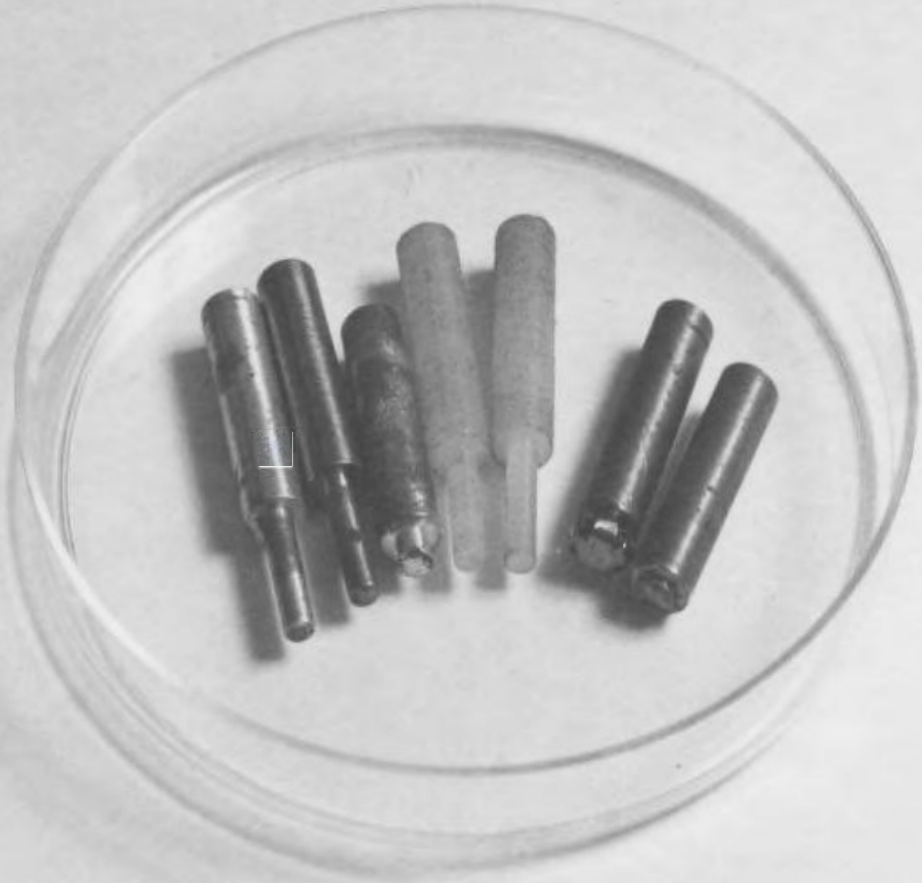

Figure 33 Wear Specimens Used

With the hardened disc, more complete experiments can be performed and if desired a quantitative value of the wear rate coefficient can be obtained from the graph.

5.1.3 Test Run Fretting Apparatus

Procedure and Comments

The apparatus was set up according to instructions given in the laboratory experiments section. The main concern here is to test the running gear. As mentioned for the dry wear test, the hardened plate was not ready, so the mild steel plate was used. A brass pin under a load of 2.2 lbs (1 kg) was used.

Results

The apparatus performed well up to 275 rpm, above which separation of the cam and follower occurred. The apparatus was run at 250 rpm for 15 minutes, but little bulk wear occurred. The debris was very fine and dark.

Discussion

Vibrations from 0 - 275 c/sec should be satisfactory for this type of experiment. Even though large quantities of wear did not occur for this experiment, longer experiments with other materials and conditions could produce interesting wear results. It does provide another source and type of wear phenomena.

The debris formed was completely different from the debris for similar wear in pure dry wear (section 5.1.2). It was very fine and dark. This is possibly due to oxidation.

Experimenters can, if they wish, and if the auxillary equipment is available, analyse the debris to determine exactly the composition of what is formed during fretting situations.

5.1.4 Test Run Hydrodynamic Lubrication Apparatus

Procedure and Comments

The equipment was set up according to the instructions given in the laboratory experiment section. The running gear performed well, but some difficulty was encountered with the alignment of the bearing pad over the disc. Firstly, the disc alignment was not perfectly true and variations of .004 in. were measured at the pad radius. Another alignment problem arose as a result of the guides used at the end of the cross-member. Pins were used as guides and these were not sufficient to prevent slight rotation of the bar. Therefore, the film thicknesses shown in the results are actually average thicknesses during a revolution.

In spite of both of these problems, three test runs were performed successfully and the results are within reason. These results are given below and plotted on

Figure 34, along with the theoretical results, Figure 35. A photograph of one of these test runs is shown in Figure 36.

Results

Test Run # 1

Oil: Esso Kutwell 45 (Light cutting oil)

Temperature: 20°C

Viscosity: ν = 410 SSU = 90 cs = .14 in^2/sec.

(Measured with Saybolt Viscometer)

Speed: 25 rev in 36.6 sec = 41 rpm

h_1 = .020 in.

h_2 = .013 in.

Manometer #

	1	2	3	4	5	6	7	8	9	10	11	12	13
Height (in)	7.5	13.0	17.2	16.4	16.4	14.9	13.9	10.7	6.7	3.3	11.9	16.1	7.0

Test Run # 2

Oil: Esso Kutwell 45 (Light cutting oil)

Temperature: 20°C

Viscosity: ν = 410 SSU

Speed: 25 rev in 44 sec = 34 rpm

h_1 = .020 in.

h_2 = .013 in.

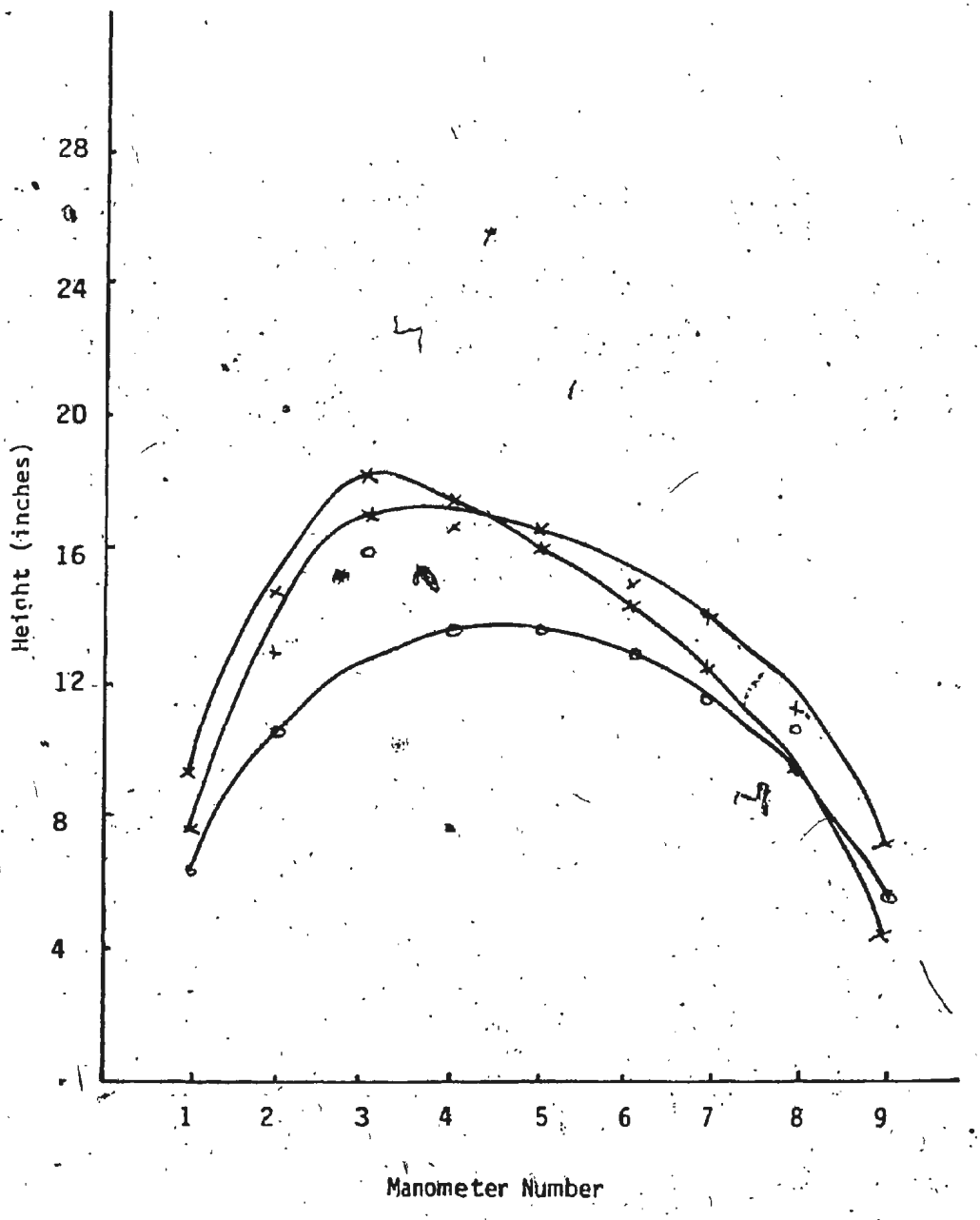

Figure 34. Hydrodynamic Test Results

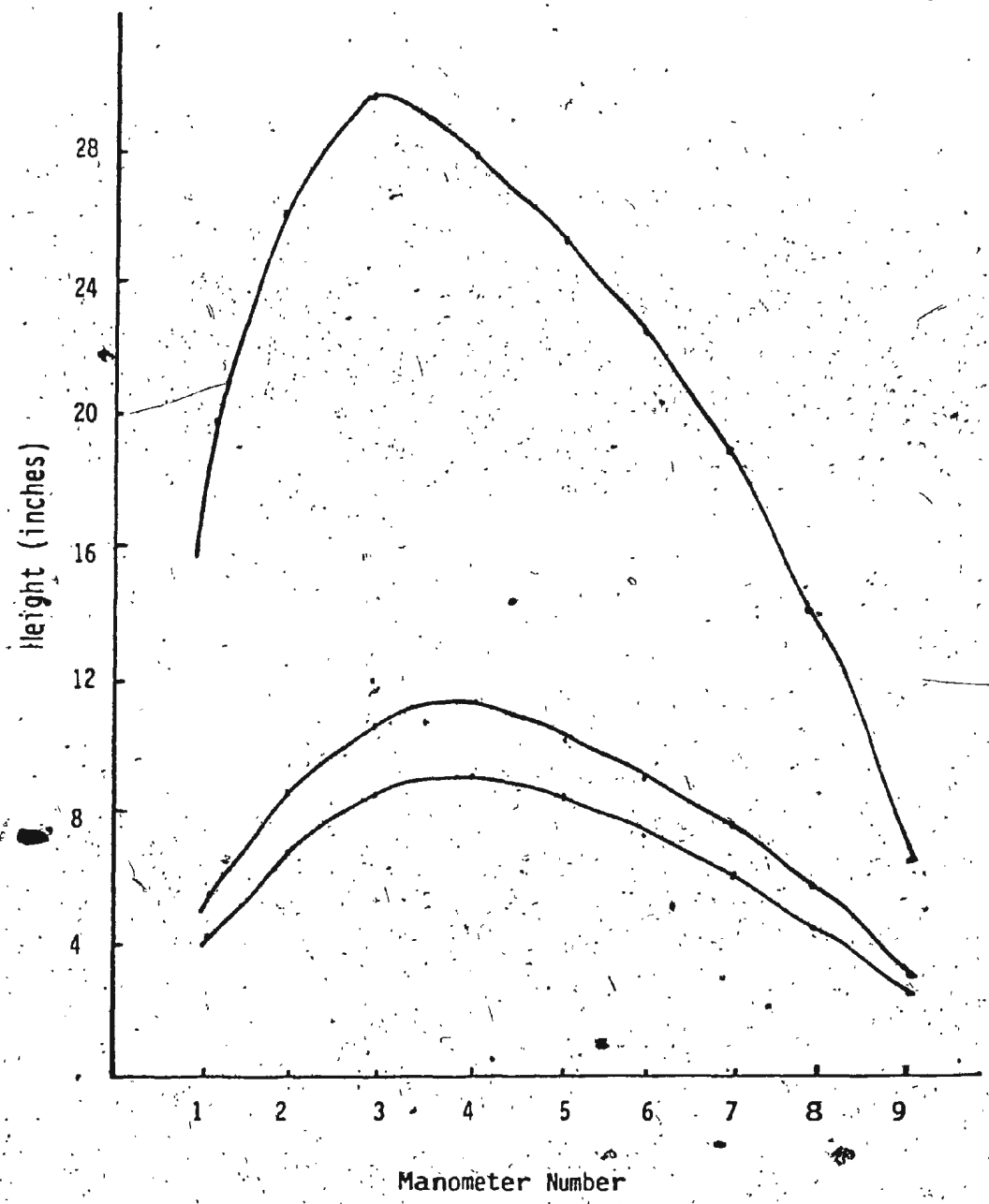

Figure 35 Theoretical Results for Hydrodynamic Tests

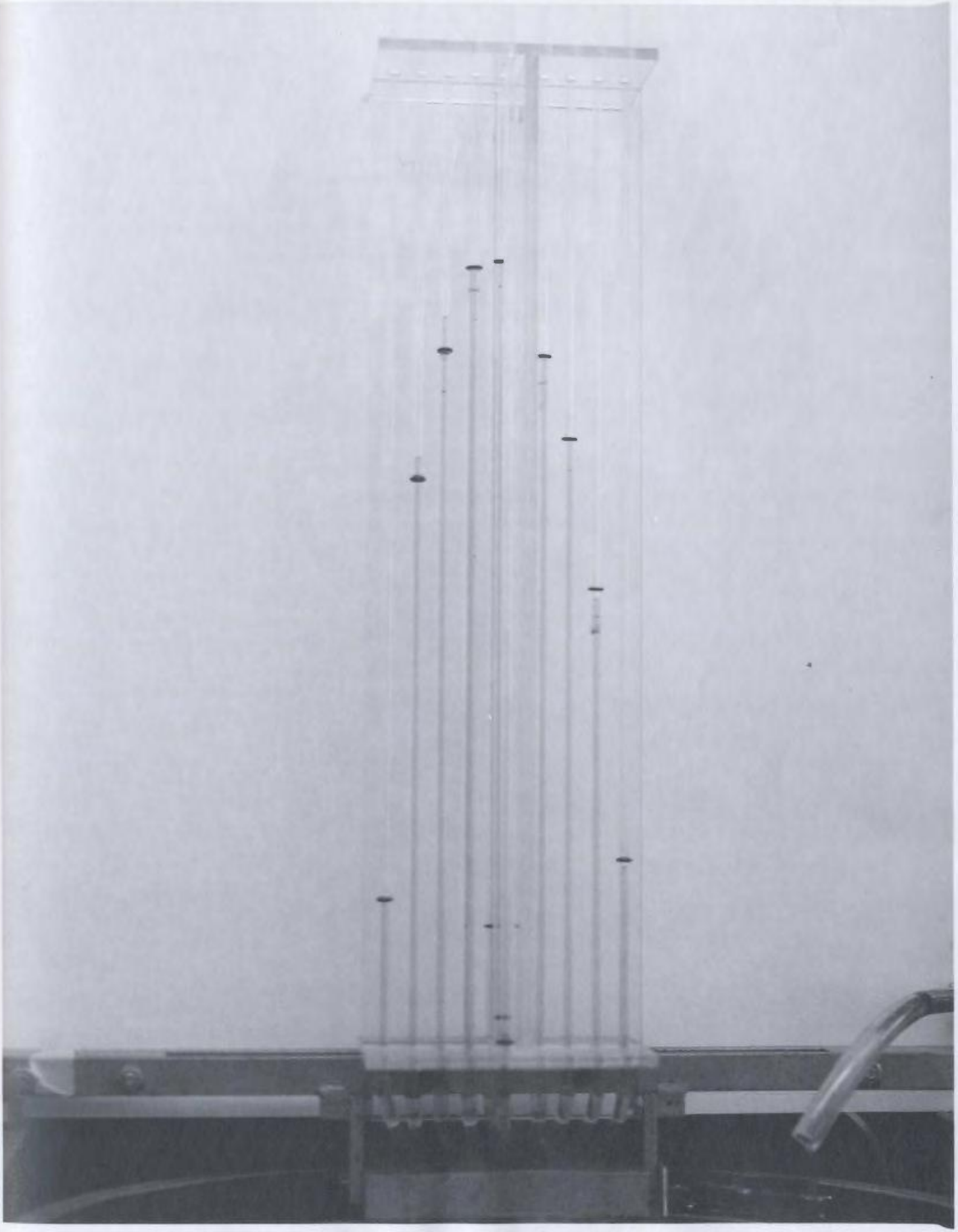

Figure 36 Test Run - Hydrodynamic Apparatus

Manometer #

	1	2	3	4	5	6	7	8	9	10	11	12	13
Height (in)	6.2	104	16.0	13.7	13.7	12.2	11.3	9.3	5.2	3.5	9.8	13.7	5.6

Test Run # 3

Oil: SAE 10W-30 (Lubricating Oil)

Temperature: 20°C

Viscosity: ν = 825 sec = .281 in^2/sec

Speed: 25 rev in 41.7 sec = 36 rpm

h_1 = .020 in

h_2 = .011 in

Manometer #

	1	2	3	4	5	6	7	8	9	10	11	12	13
Height (in)	9.5	14.7	18.7	17.0	16.1	14.4	12.4	9.8	5.7	4.7	12.5	14.9	5.9

Theoretically:

$$H = \frac{\pi \nu r N B \eta}{5 h_2^2 g} K_p$$

$$M' = \frac{h_1}{h_2} - 1$$

where N = rpm

ν = in^2/sec

B = 3.82 in

r = 6 in

g = 32x12 in/sec^2

h_2 = inches

h_1 = inches

η = .25

kp = f $(M', \frac{x}{B})$

Substituting these values into the equations, we get for each test run:

H_1 (Kp) = 318 Kp ; M_1' = .54

H_2 (Kp) = 264 Kp ; M_2' = .54

H_3 (Kp) = 781 Kp ; M_3' = .82

Values of Kp for each manometer are read off the graph (Figure 17) and values of H are calculated and plotted.

	Manometer #								
	1	2	3	4	5	6	7	8	9
Kp_1 (interpolated)	.015	.026	.032	.033	.032	.028	.023	.016	.008
H_1	4.8	8.3	10.2	10.5	10.2	8.9	7.3	5.1	2.5
Kp_2	.015	.026	.032	.033	.032	.028	.023	.016	.008
H_2	4.0	6.9	8.4	8.7	8.4	7.4	6.1	4.2	2.1
Kp_3	.020	.034	.038	.037	.032	.028	.024	.017	.008
H_3	15.6	26.5	29.7	28.9	25.0	21.9	18.7	13.3	6.2

Discussion

The apparatus certainly performs well enough to conduct the experiments for which it was designed. Even with the alignment problems, the characteristic pressure profile is definitely evident, although the agreement between the test results and the theoretical values is poor (between 30 and 50% deviation). The alignment problem can be solved simply with a closer check during the construction and by changing the guide pins to properly machined flat guides. With these changes, it is felt the results can be brought to within reasonable agreement with theory.

5.1.5 Test Run - Four Ball Failure Apparatus

Procedure and Comments

This rig has actually gone through several design iterations to reach the present form. Problems were encountered with the bearing system, the coupling and the cut off mechanism.

The rig was originally built using journal bearings instead of the radial bearings as shown in the present design.

Oil passed through the journal bearing down to the thrust bearing and into the test area. While trying to run the rig, the shaft continually seized on the journal and scored both shaft and bearing. This may have been due to misalignment of the shaft when it became loaded and the oil being used could not support the radial load placed on the bearing. Also, there was evidence of debris getting into the oil. It was decided therefore to incorporate radial ball bearings into the design and to have these permanently sealed.

The shaft was originally connected to the motor with a very soft wire connector which failed in shear when the friction became too high as a result of four-ball failure. The broken coupling also activated a micro switch which interrupted the motor current and operated as an automatic cut off. This system worked, but not

satisfactorily. The coupling itself was cumbersome and difficult to set up, and it did not always cut off the motor when the wire connector sheared. For these reasons a conventional coupling replaced the connector.

It was thought that a conventional, adjustable cut-off current, motor starter could perhaps act as a failure indicator, but this has not been incorporated as yet.

It was decided to run the rig as it was to make sure it would produce suitable failures with the configuration used, and to leave the automatic cut off and timing for future refinements. Failure was to be decided by periodic visual checks coupled with close noise level monitoring. Fortunately, the noise level was all that was needed, and the unaided ear could detect failure (with just a single spall) quite easily.

Lubricant was applied to the thrust bearing through a nipple in the bearing block.

The four-ball rig was then tested.

The vacuum cleaner motor had previously been checked and ran unloaded at speeds up to 10,000 rpm.

At first the thrust bearing was completely filled with oil (as much as it could hold) and the rig run. This proved unfortunate because there was too much oil in the bearing. The excess oil (without circulation) caused the bearing to get hot and the motor to overheat. Also,

because no oil seal for the bearing was provided, oil was thrown clear off the rig.

A closer look at the oil problem led to the sealing configuration shown in Figure 37. The nylon ring (N) becomes the wear and sealing surface against a steel ring (R) attached to the bottom of the shaft. The reason for this particular configuration was to minimize the friction torque required for sealing, i.e. the only friction would be from the weight of the nylon on the steel.

The thrust block, shaft and loading head were modified to accommodate the seal and the rig was reassembled for more testing.

This time only a small amount of oil was added to the thrust bearing. The motor was started (controlled through a variac) and brought up to approximately 2000 rpm. The test balls (5/32" diameter) were brought up against the shaft end and load applied. The motor speed was extremely sensitive to the load and attempts to go higher than 175 lbs. and 2000 rpm caused overheating of the motor. It was decided to run the rig at this load and speed to see what happened. This was all that was needed and after approximately 12 minutes a sharp click, which turned out to be a spalled ball, was heard.

A second run produced similar results, but it was obvious the vacuum cleaner motor was having trouble.

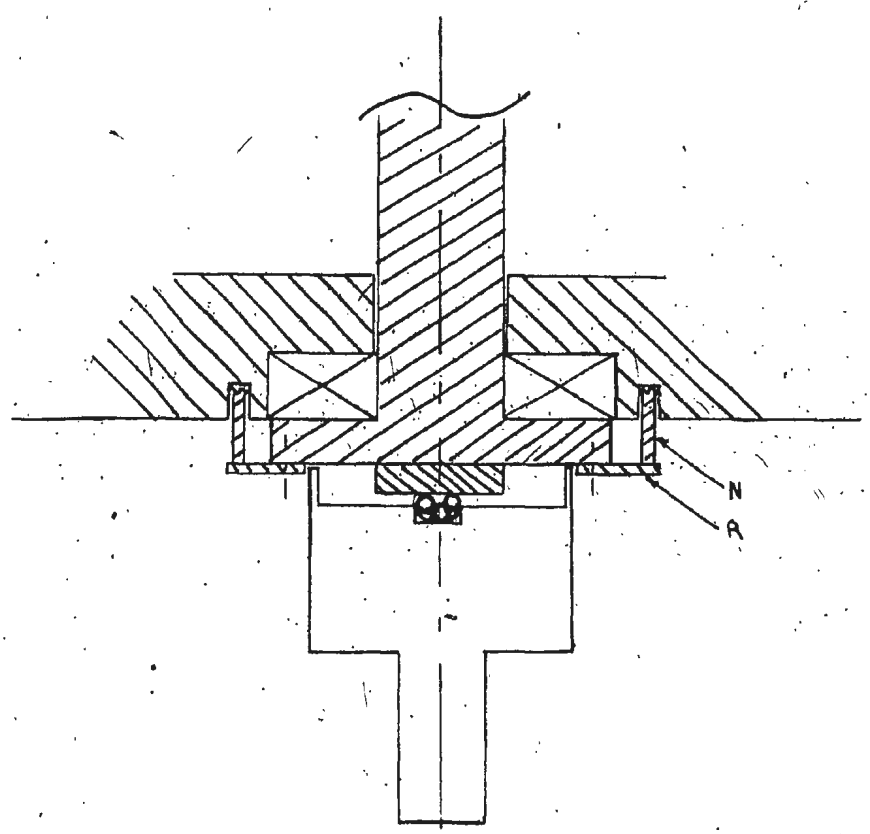

Figure 37 Sealing Arrangement - Four-Ball Apparatus
(schematic only)

Encouraged by the low load and speed requirements it was decided to try another, but slower motor; an electric hand drill. A rough frame was made to mount the motor and a sawed off 5/16" bolt was used as a shaft to couple the drill to the rig. It ran at approximately 800 rpm. At this low speed, the seal was removed to see how oil would leak.

The rig was then tested again. This time everything performed satisfactorily. The failure of the balls could be detected even above the normal (noisy) operation of the electric drill. The oil leakage was tolerable provided too much wasn't used.

For these final tests, the size of the balls was increased from 5/32" diameter to 3/16" and 1/4". The results of these tests are given below and figures 38, 39, and 40 are photomicrographs of the failed balls. Figure 41 is a photomicrograph of a spalled piece off a ball.

Test No.	Ball Diameter	Oil Used	Load	Speed (RPM)	Time (Minutes)
1	3/16"	SAE10W-30 Esso Extra	260 lb.	800	22
2	3/16"	"	260 lb.	800	45
3	1/4"	"	440 lb.	800	115

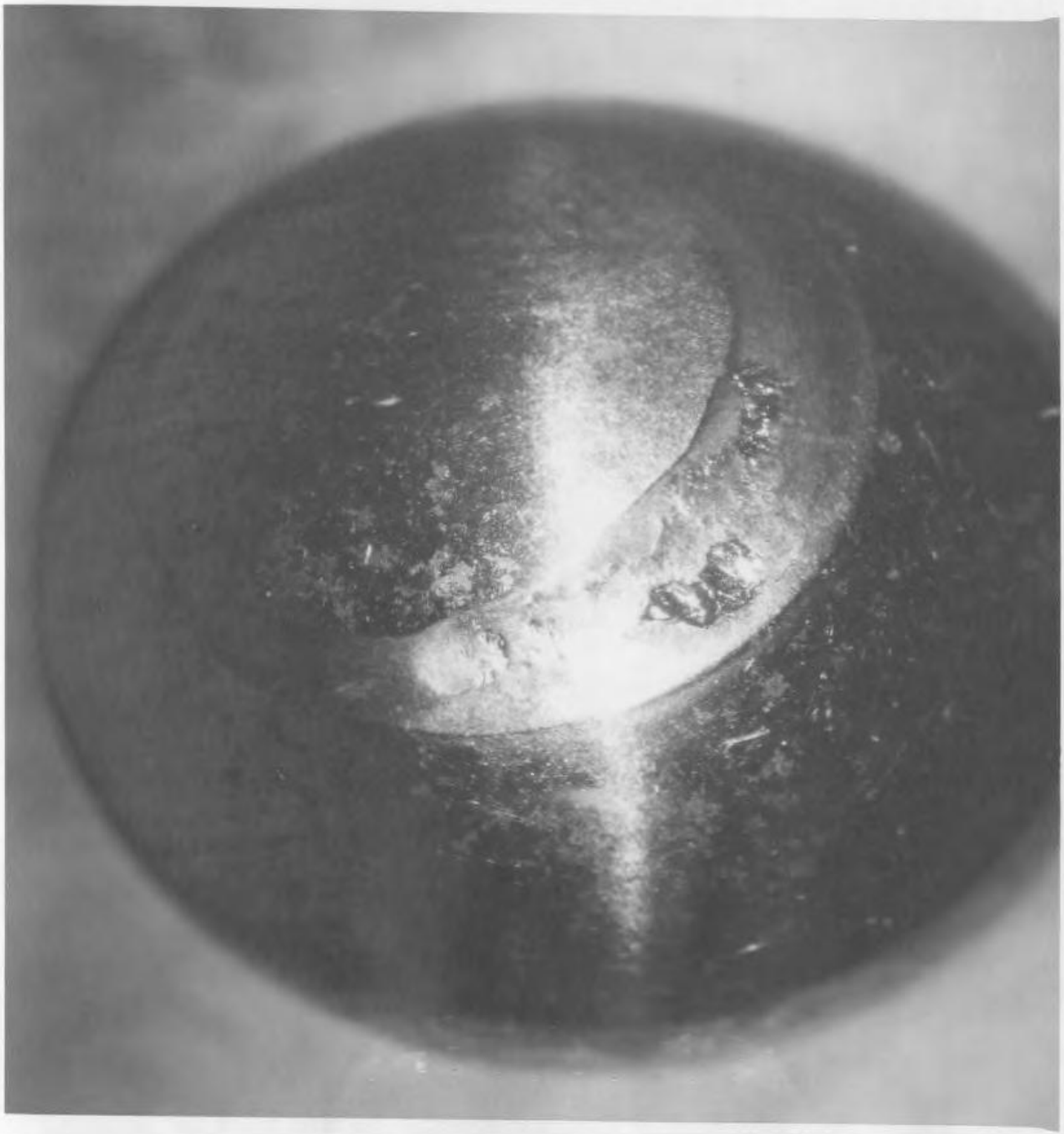

Figure 38 Failure of 1/4" Dia. Ball @ 400 lbs. and 800 rpm.
Time 117 Minutes

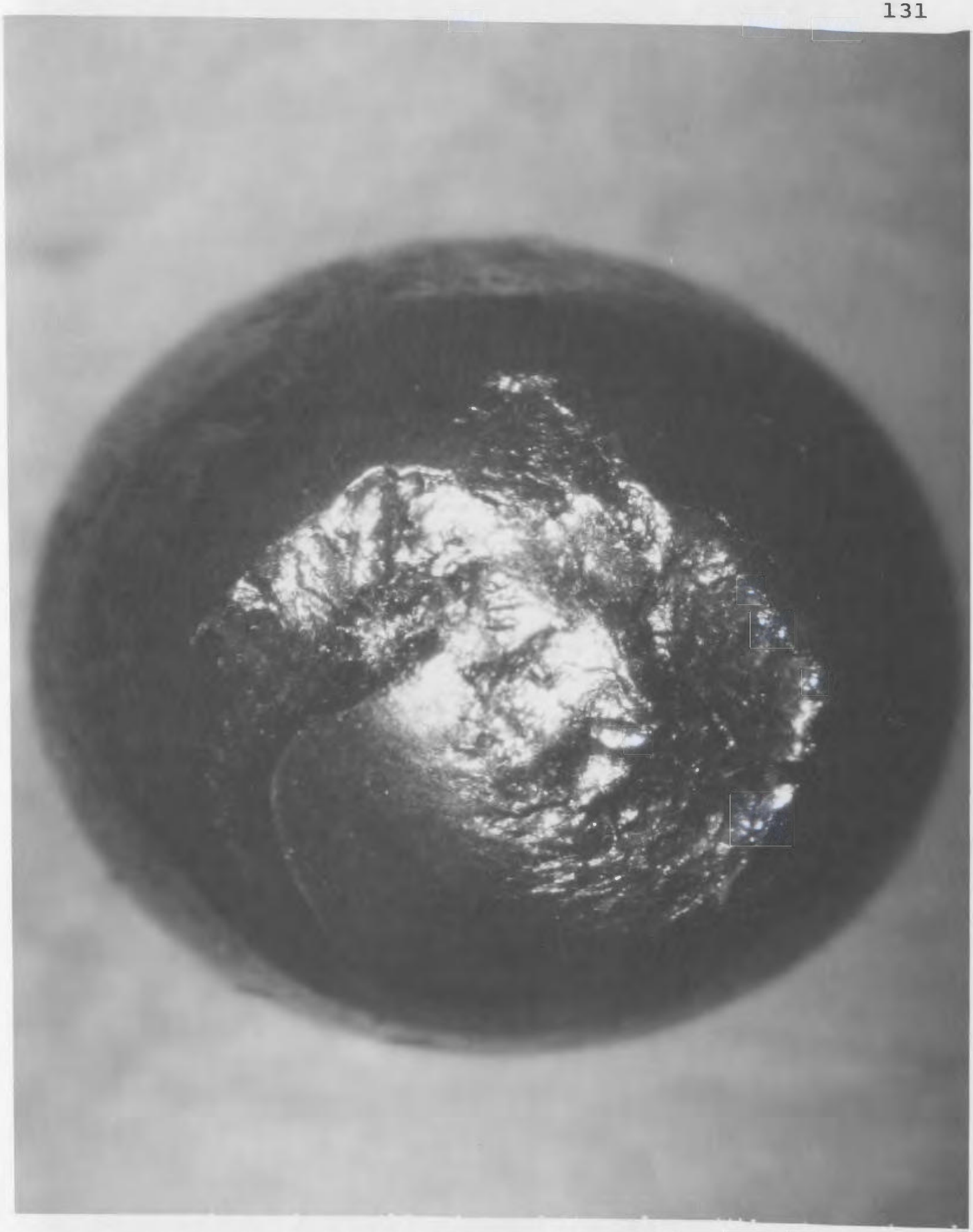

Figure 39 Failure of 3/16" Dia. Ball @ 225 lbs. and 800 rpm.
Time 45 Minutes

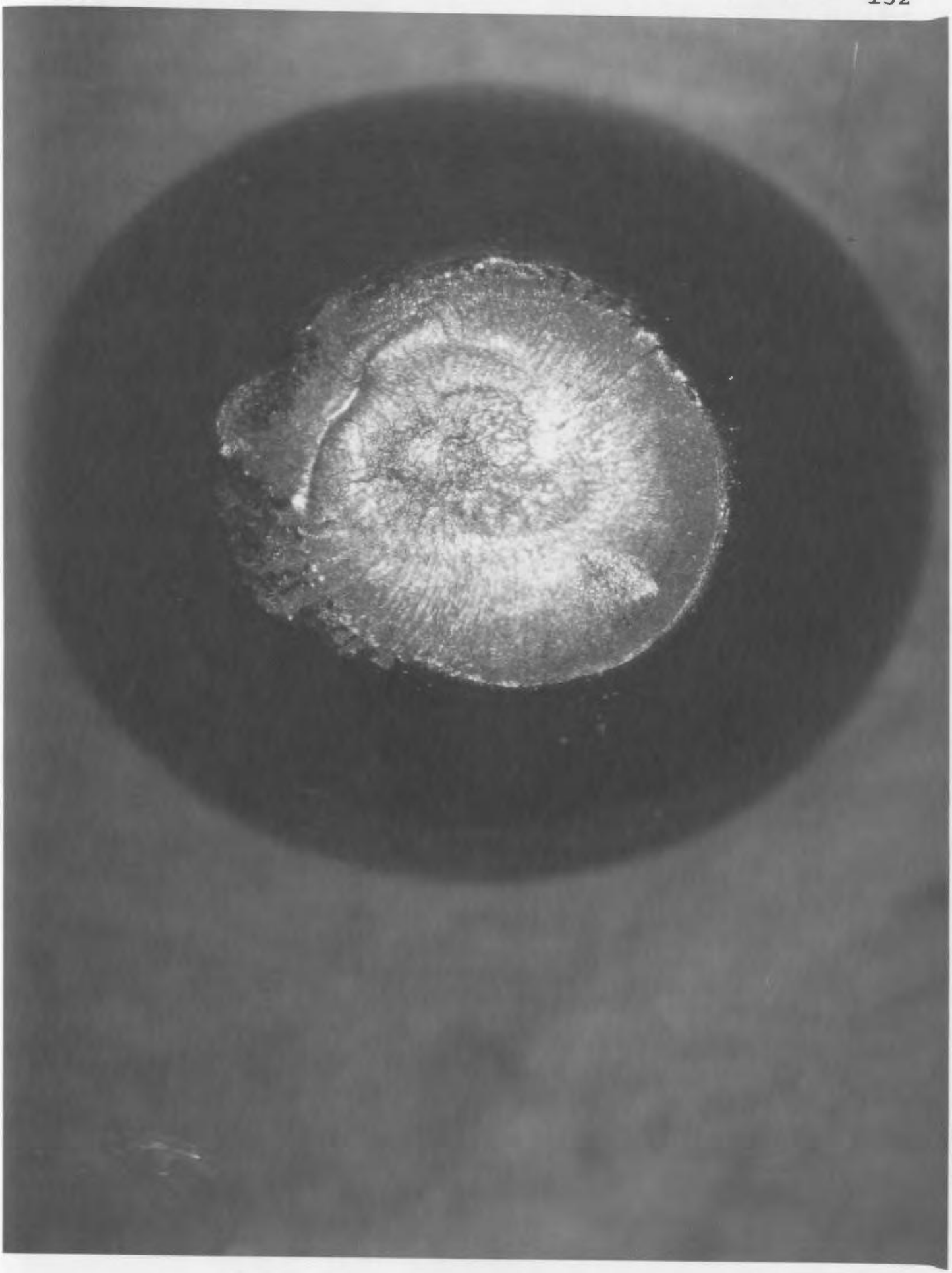

Figure 40 Failure of 3/16" Dia. Ball @ 225 lbs. and 800 rpm.
Time 22 Minutes

Figure 41 Spalled Piece from Failed Ball

Prior to these tests several other sets of balls were run to failure, but as these were the initial trials during which time the load, time and speed were not accurately recorded.

Discussion

The results confirm that the inverted four-ball configuration is suitable for failure testing. The failure mode as seen from the photomicrographs is clearly characteristic of the fatigue failure known to occur in ball bearings. The hardened cup and shaft showed no signs of failure themselves during the testing.

There are, however, design problems which must be resolved.

Although not statistically significant, the above results do put in place the order of magnitude of the speeds, loads and times required to produce failure with this rig. These are lower than the original estimates, and hence it is possible to scale the rig down or conversely increase the ball size. Increasing the ball size too much is not practical unless another, larger hardened cup is readily available. In any event, the range of the loading mechanism must be brought in line with that used during the eventual testing.

The problem of oil leakage can easily be resolved by using an oil cup and wick as mentioned in the design section

and shown on the design drawings.

Design additions which are needed include an automatic timing and cut-off mechanism. The most sensible recommendation for this would be some form of an acoustic sensor and controller.

Speed during the testing was measured with a stroboscope. As a simpler working tool, it may be better to use a constant speed motor which would avoid the problem of speed control and monitoring.

5.2 Cost Analysis

The following is a breakdown of the materials costs for each design unit. Some of the items were priced in 1974, but by 1978 the costs had escalated drastically. 1978 estimates are given.

It should be noted that costs for certain items vary substantially with locality.

The prices quoted here are, in the main, only estimates.

5.2.1 Coefficient of Friction Device

Item	Quantity	Unit	Price
1/4" plexiglass	2 sq. ft.	$ 5.06	$11.02
1/2" diameter nylon	5 in.	.83/ft.	.35
Nylon bar + pins	.15 lb.	1.50	.25
Teflon bar + pins	.25 lb.	30.00/lb.	4.50
Brass bar + pins	.40 lb.	2.00	.80
Aluminum bar + pins	.15 lb.	1.50	.25
Steel bar + pins	.35 lb.	.22	.08
Adhesive			2.00
Miscellaneous			2.00
		Total	$21.25

Total cost for coefficient of friction device is $21.25 plus labour.

5.2.2 Multipurpose Tribo-demonstrator

Common Components

This includes the cost of the frame, motor and drive for the wear, hydrodynamic lubrication and fretting experiments.

Item	Quantity	Unit	Price
S.C.R. Motor Cont.	1	160.00	$160.00
1750 RPM D.C. Motor	1	210.00	210.00
Angular Contact Bearing (SKF 72068)	1	7.60	7.60
Timing Pulleys	2	5.00	10.00
Timing Belt	1	5.00	5.00
Steel Angle	35 lb.	.25	8.75
Steel Plate	8 lb.	.25	2.00
Round Steel	7 lb.	.25	1.75
Bearing Bronze	1 lb.	2.00	2.00
Miscellaneous (welding electrodes, fasteners, etc.)			50.00
		Total	$457.10

Pin and Disc Machine

Item	Quantity	Unit	Price
Plate steel	20.0 lb	.22/lb.	$ 4.40
Channel	2.3 lb.	.25/lb.	.58
Brass	.4 lb.	2.00/lb.	.80
Fasteners			5.00
Strain gauge	2.	5.00 ea.	10.00
Miscellaneous			3.00
		Total	$23.78

Hydrodynamic Apparatus

Item	Quantity	Unit	Price
1/4" plate glass	1.6 sq. ft.	$3.70	$ 5.92
1/4" plexiglass	1.5 sq. ft.	5.06	7.50
Steel	70 lb.	.25	17.50
Glass tubing	25 ft.	.05/ft.	1.25
Plastic tubing	2 ft.	.30/ft.	.60
Shut-off valve			5.00
Aluminum	4 lb.	1.50	6.00
Fasteners			5.00
Miscellaneous			4.00
		Total	$52.77

Fretting Attachments

Item	Quantity	Unit	Price
Steel	10 lb.	$ .22/lb.	$2.20
Bearing Bronze	1 lb.	2.00/lb.	2.00
Fasteners			5.00
Miscellaneous			2.00
		Total	$11.20

Multipurpose Tribo-demonstrator Total Costs:

Common Components	$457.10
Pin and Disc	23.78
Hydrodynamic	52.77
Fretting	11.20
Total	$543.85

Total cost of Multipurpose Tribo-demonstrator is $543.85 plus labour.

5.2.3 Four-Ball Machine

Item	Quantity	Unit	Price
Steel	80 lb.	$ .25	$ 20.00
Brass	.3 lb.	2.00	.60
Radial bearing (SKF 6003/2RS)	2	3.59	7.18
Thrust bearing (SkF 51406)	1	14.90	14.90
Hydraulic lifter	1	4.00	4.00
Motor	1	25.00	25.00
Motor Starter Assembly	1	50.00	50.00
Enerpac RCH 121 Cy.	1	90.00	90.00
P14 Hand pump	1	50.30	50.30
Hose Assembly	1	22.74	22.74
Adapter	1	12.04	12.04
Gauge	1	24.50	24.50
Fasteners			10.00
Miscellaneous			33.00
		Total	$364.26

Total cost of 4-ball machine is $364.26 plus labour.

5.3 General Discussion

Tribology is a difficult subject to teach. It covers many disciplines (physics, chemistry, thermodynamics, materials science, etc.) and at many levels (motor mechanics to research scientists). It is an equally difficult subject to learn. What often happens is that one's total energy is devoted to some small aspect of tribology, partly because it is so difficult to keep all aspects in one's mind at the same time.

Much tribology is hidden. The parts in contact and relative motion on machinery are seldom visible and the tribologist must assemble his practical knowledge from disassembled machinery, broken parts and the warehouse. Even when the "situation" is visible the important action (e.g. E.P. additives) is often microscopic.

It is here that experience reveals itself as the real, practical tribology teacher, since only through experience can one see the variety of components, and their actions on each other, involved in tribology.

Naturally a tribology laboratory cannot duplicate this but it can set the basis for good questioning and deep reasoning when tribology related problems occur.

Industrial tribology experience does not give the instant reinforcement of the pure disciplines. Mix concentrated acid and water together the wrong way, and one

knows immediately something went wrong. Select a wrong bearing or lubricant and it may take months or years for the associated failure to occur, and even then, it may not be attributed to the proper cause and proper responsibility assigned.

It was the intent of this project to design equipment, at low costs, which would provide for students a sampling of some "hands-on" tribology situations, and in a manner which provided immediate reinforcement. The equipment described here accomplishes this.

All of the equipment provides for some manner of quick comparative analysis in addition to the demonstration of some fundamental rule or law.

The equipment was to be built at a materials cost of less than $800 per unit. It was possible to produce the equipment for well under this amount with the total cost for the three pieces of equipment (5 experiments) being approximately $1000.00.

A couple of minor problems did arise during the construction. During the testing stage it was difficult on times to coordinate, in spite of good cooperation of the machine shop design changes as the design progressed. Another problem was lack of materials locally. The motor and controller used for the testing was actually borrowed from another laboratory, because the set ordered never did arrive. Similarly, the test balls for the four-ball machine

had to be ordered from outside the province.

Each piece of equipment fully satisfies the functional design criteria. There exists however, with each, the opportunity for extensions and refinements.

The coefficient of friction devices provides an unusual but effective method for studying friction. In fact, with slightly more sophistication it can be used for rather exciting, low normal force, dynamic friction studies. Since the normal force exerted on the slider depends on the coefficient of friction between the holder and the tray, and the weight of the holder, this normal force can be made quite small simply by reducing this coefficient.

i.e. $N = \mu_{13} W \cos \Psi$ (section 4.3.1)

μ_{13} can be reduced by using lubricants or even by making the holder an air bearing. But the problem of measuring the small friction force doesn't exist, since the holder need only be tracked to get the correct friction values.

The multipurpose tribo-demonstrator operates successfully. The pin and disc machine allows for very simple but effective wear measurements and comparisons, and the hydrodynamic rig provides more than adequate facility for demonstrating hydrodynamic lubrication. With the slight changes previously mentioned for ensuring correct alignment, it will certainly also provide results in better agreement with the theory.

The concept of a multipurpose rig is economical but it is now felt that a slightly different arrangement might be better. The major expense for this rig is the motor and control. If two frames and drives were built using exactly the same design, then it would be possible to keep the hydrodynamic apparatus set up on one and both wear tests set up on the other. The same motor would still drive both. In this way, there would be no loose pieces on the benches to get broken or lost. In fact one could build a second frame as cheaply as he could a proper storage box for the parts not in use.

The inverted four ball tester is probably the most useful design. It makes available for a relatively small amount of money, a machine to be used on topics for which few simple and cheap educational pieces of equipment existed before. Despite the need for design additions, the equipment as it exists is fully operational. Its greatest value may well be realized after it has been used for several years and failure data collected. It may be useful as a testing tool as well as an educational item.

The items described here will continue to be refined at Memorial's tribology laboratory. An immediate project is being organised to carry out further work with the four-ball rig in an effort to make the necessary design additions and to do extensive testing in order to establish significant failure criteria.

Of interest to colleges and universities who do not wish to do their own fabrication is the fact that a local fabrication company has already expressed interest in the commercial production of the equipment.

It is only recently that tribology is getting its recognition as a mechanical engineering entity along with such traditional topics as thermodynamics, mechanics, structural analysis, etc. and hopefully with the availability of tribology texts such as references 19 and 43 , and cheap and effective equipment for tribology laboratories, tribology courses will soon start appearing in the engineering curricula. The equipment designed in this project can serve as a starting point for such tribology laboratories.

6.0 TYPICAL EXPERIMENTS

This section is a compilation, in laboratory experiment format, of tribology experiments which can be performed with the equipment designed during this project.

Not all the experiments described for each piece of apparatus have been performed, but at least one for each section has been done in order to check the equipment functions.

Users can start with these experiments and this format and then change to those which best suit their style and program as they gain familiarity with the equipment.

6.1 Novel Coefficient of Friction Device

Theory:

Friction is defined as the resistance to motion encountered when two contacting surfaces move relative to each other. It is a force whose magnitude is given by:

$f = \mu N$ where f = frictional force

μ = coefficient of friction between the two surfaces

N = normal force between the two surfaces

The direction of the frictional force is opposite to that of the relative motion.

The most popular explanation of friction today is based on an adhesion theory. By this mechanism, it is believed that the friction force arises from the force required to shear a "cold weld" formed at the junctions of contacting asperities - the weld being caused by the adhesion between the two surfaces (see Figure 42).

Other smaller contributions to the friction force are a roughness component which is necessary to "lift" the load out of the asperities; a ploughing component necessary to break interlocking asperities and a hystersis component for internal energy dissipation. The role of each varies with the type of material and situation.

The frictional properties of the system will also depend on the characteristics of the oxide and contaminant

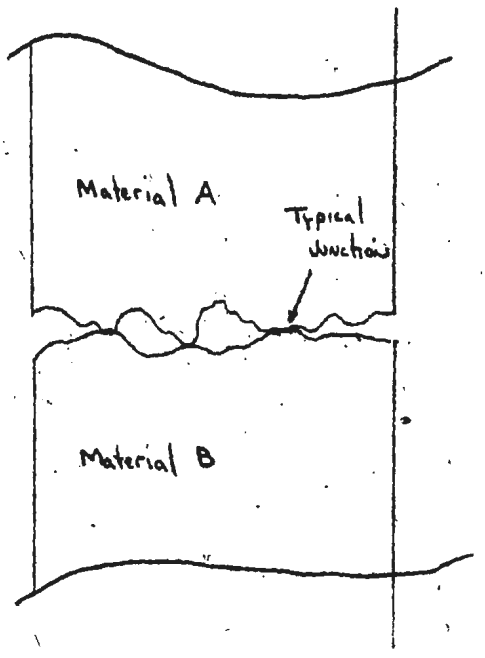

Figure 42 Typical Contact Geometry between 2 Materials

films which will most certainly exist on the surfaces.

Part I

Objective

To determine the coefficient of friction between various sets of materials and generate a table of coefficients of friction for these materials.

Apparatus

Coefficient of friction device complete with test pins.

Procedure

Set up and level the carrier tray. Then, starting with the brass bar and brass pins, place the bar on the trolley and the pins in the slider. Arrange the trolley so that the datum point on the slider is at the start position. Push the trolley forward, being careful not to accelerate it, until the datum point on the slider intersects the scale. This value is the coefficient for this combination of materials. Enter the value in the table below in the box corresponding to brass - brass. Note there are three spaces for each pair of materials, one each for the materials as bar or slider respectively. The main block is then the average. Repeat systematically until all combinations have been tried and the values entered.

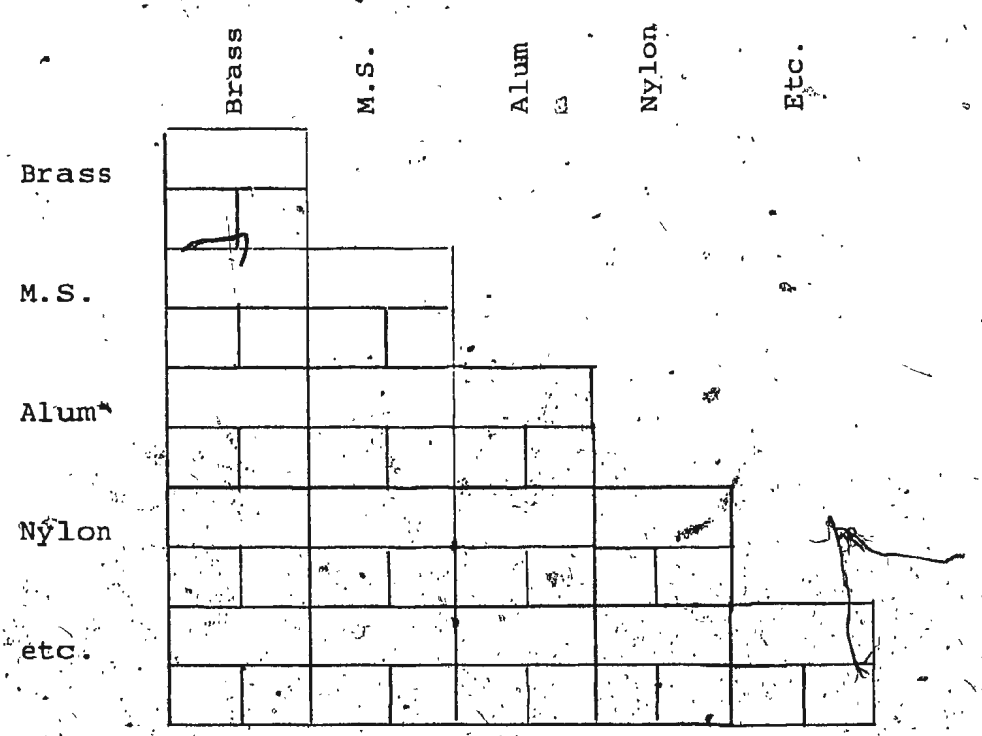

Table 2. Recording Scheme for Friction Device

Part II

Objective

To determine and demonstrate the values of rolling friction.

Procedure

Using the same apparatus and procedure of part I, replace the slider with either a ball or cylindrical roller. Determine the coefficient of friction for these materials.

Part III

Objective

To demonstrate the independence of the value determine on the friction between the tray and the slider.

Procedure

Lightly lubricate the tray and the slider and repeat a value determination for one set of materials. Compare the value with that obtained in Part I.

Conclusions

Prepare a laboratory report for the above set of experiments. Compare the values obtained with those expected and discuss any discrepancies.

6.2 Multipurpose Tribo-demonstrator

Pin and Disc Machine for Friction and Wear

Theory

Wear may be defined as the removal of material from solid surfaces by mechanical action.

There are four main types of wear generally recognised, and these are:

1. adhesive wear - during which the particles are pulled from one surface to adhere to another
2. abrasive wear - during which the particles are ploughed out from the surface
3. corrosive wear - increase in wear rate due to a chemically active environment
4. surface fatigue wear - during which the wear is caused by repeated application of stress to the surface in sliding or rolling.

Other manifestations of wear occur as fretting, erosion, cavitation and brittle fracture wear.

Also when wear occurs it can occur as either mild or severe depending upon load conditions, and changes in the mode can easily be observed on the wear rate vs load curve.

Because of the nature of wear, analytic relationships are not all-encompassing nor readily available. We can,

however, formulate some empirical relationships. For plastic conditions (i.e. high load: area), the volume of wear is believed to be proportional to the load and length of sliding whilst inversely proportional to the hardness.

i.e. $V \alpha \frac{N\ L}{P_M}$ where N = load

L = length of sliding

P_M = hardness

or $V = K \frac{NL}{P_M}$ where K = wear coefficient

The wear coefficient depends upon the type of material involved.

Part I

Objective

To demonstrate the dependency of wear volume on sliding distance; and to compare the wear coefficients of various materials.

Apparatus

Pin and disc wear apparatus complete with variable speed motor and controller; test pins of varying materials; vernier calipers; stroboscope if necessary*; cleaning compound (acetone, etc.); grinding paste or paper; weights.

Procedure

Set up the apparatus with the wear disc in place. Start the motor running at low speed and with acetone degrease the wear disc. If the disc shows signs of material transfer from previous experiments, use an abrasive to remove the material. When the disc is sufficiently clean, choose one of the test pins and insert it into the holder. Place the weight on the platform and run the machine for a short period to lap the end of the pin to a smooth finish. Remove the pin and using the vernier calipers measure its length.

* The motor may be calibrated in rpm previous to the experiment or the stroboscope can be used to measure rpm directly.

Replace the pin and weight and repeat until a sufficient number of time and wear measurements have been made and recorded.

Plot the results and from the graph obtain the wear coefficient for that material.

Repeat for other materials and plot these values on the same graph. Compare the various wear rates.

Part II

Objective

To demonstrate the effect of load on the wear mode for a wear regime.

Note: This experiment can be very time consuming and in order to save time and make the experiment practicable, only one value of wear and time per load can be used to get the wear rate. Also, with constant cross-section pins and constant speed the wear rate can be given simply as length/time. The shape of the wear rate vs. load curve can still be seen.

Procedure

Set up the experiment as in Part I. Starting with a 100g weight, make a measurement of wear for some set time interval. Then increment the load by 100g and make another measurement of wear and time. Continue until sufficient

recordings have been made. Record the data in a table like Table 3. Plot the information obtained.

Conclusions

Prepare a laboratory report for the above set of experiments. Present all the data in graphical form and comment upon the results. Compare with what you expect and discuss any discrepancies.

Table 3 Recording Scheme - Wear Mode Test

Date: _____

Material _____

Speed _____

Original Length _____

Load	Length L_N	Time Δt	Rate $(L_N - L_{N+1})/\Delta t$

Hydrodynamic Lubrication Apparatus

Theory

Hydrodynamic lubrication occurs when the shape and relative motion of two sliding surfaces (with lubricant between them) causes the formation of a fluid film having sufficient pressure to maintain separation between the two surfaces. The resistance to motion in this instance arises solely from the internal friction or viscosity of the lubricant. This principle is used in the construction of various types of plane slider and journal bearings.

Bearings similar to the one used here (i.e. sector shaped) are usually found as a circular group in hydrodynamic thrust bearings. For example, the turbines in Churchill Falls are supported by such a configuration.

The theory governing the total operation of the bearing pad yields the very complex Reynolds equation. However, if we assume the flow to be unidirectional the equation can be simplified.*

For a plane slider inclined pad, Reynolds' equation in one direction simplifies to:

* Boyd and O'Connor agree that a sector pad can be approximated by a plane slider if the parameters are calculated at the mean radius.

$$\frac{dP}{dx} = 6\ U\ \mu\ \left(\frac{h-\bar{h}}{h^3}\right)$$

where U = velocity

μ = absolute viscosity

h = film thickness

$\bar{h}$ = film thickness at maximum pressure

As can be seen, the pressure distribution is a function of speed, viscosity and slider geometry.

Apparatus

Hydrodynamic lubrication rig complete with S.C.R. controlled motor drive; stop watch; thickness gauges; oils of various viscosity; scale.

Part I

Objective

To verify Reynolds' equation in the simplified form applicable to a plane slider inclined pad bearing with one directional flow.

i.e. $$\frac{dP}{dx} = 6\ U\ \mu\ \left(\frac{h-\bar{h}}{h^3}\right)$$

Procedure

Set up the apparatus and using the thickness gauges, set the inlet and outlet film thicknesses. [Around h_1 = .020 in and h_2 = .010 in is a good starting point.] Open the

valve from the oil reservoir and when a thick film of oil builds up in front of the bearing start the motor. Adjust the speed and allow sufficient time for the profile to become fully developed. Measure and record the oil level in the various manometers.

Using the stop watch, measure the time required for 25 revolutions and calculate the rpm. Also, measure the temperature of the oil to get the correct viscosity, or measure the viscosity directly. Record all the data.

Results

Using the data obtained, plot the curve of P vs X. From this curve, locate the position of $\bar{h}$ and determine its value.

Estimate the value of $\frac{dP}{dx}$ at each manometer station from the curve. (Manometer levels can be used directly as the pressure valves if only the shape of the curve is of interest. For quantitative analysis, proper pressure units have to be used).

Estimate the value of $\frac{dP}{dx}$ at each manometer station from the curve, and using $h = \frac{(h_1-h_2)}{B}.x + h_2$ calculate the value of h at each station.

Arrange the data as shown in Table 4 along with the calculated values of $\frac{h-\bar{h}}{h^3}$

Table 4 Recording Scheme - Hydrodynamic Test

dP/dx	h	$(h-\bar{h})/h^3$

Plot $\frac{dP}{dx}$ vs $\frac{h-\bar{h}}{h^3}$

This should yield a straight line, the slope of which is 6 U μ.

Part II

Objective

To demonstrate the effect of speed on the pressure generated with a plane slider bearing.

Procedure

Set up the apparatus and adjust the speed to give maximum height in the manometers. Record the speed and height in one of the manometer tubes (say station #3). Without altering the film thickness setting, reduce the speed so that the level falls slightly. Again record the speed and height. Continue until a sufficient number of speed and pressure readings have been obtained to plot P vs U on a graph. Record all data.

Results

From the data obtained, plot the curve of P vs U for the selected manometer.

This should yield a straight line, i.e. P α U.

Part III

Objective

To demonstrate the effect of viscosity on the pressure generated within a plane slider bearing.

Procedure

Repeat Part II except vary the viscosity with speed and film thickness settings constant. This can be done either by changing the oil, or by heating the reservoir and thus changing the viscosity. In this case, record the temperature. If only one oil is used, a viscosity vs temperature curve should be obtained previously. Record all data.

Results

From the data obtained, plot the curve of P vs μ. This should yield a straight line, i.e. $P \alpha \mu$.

Part IV

Objective

To demonstrate the effect of slope on the pressure generated with a plane slider bearing.

Procedure

Start machine running, and after a suitable profile has been generated, vary h_1 and h_2 and observe the changes in profile. It may be necessary here to alter speed also. No data need be taken but the student can describe what happens with respect to what he expects.

Part V (optional)

Objective

To compare the results obtained with this rig, to those predicted using known solutions to Reynolds' equation.

Analysis

Refer to Figure 43

The simplified form of Reynolds' equation can be solved in terms of the slope, $M' = \frac{h_1 - h_2}{B}$, and the non-dimensional length X/B to give:

$$P = \frac{6 \mu U B}{h_2^2} Kp \quad \text{where the pressure coefficient} \quad Kp = f(M', X/B)$$

A plot of the pressure coefficients is taken from Fuller and attached. But this is for an infinitely wide bearing, and finite dimensions are accounted for by a form factor, η.

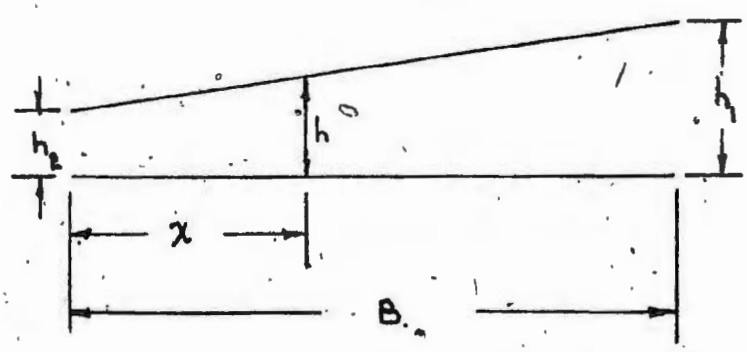

Figure 43 Slider Geometry

Hence

$$P = \frac{6\ \mu\ U\ B\ \eta}{h_2^{\ 2}}\ K_p$$

In terms of the head of oil we get:

since $P = \rho\ g\ H$ where ρ = mass density

$\mu = \rho\ \nu$ ν = kinematic viscosity .

$$U = \frac{\pi\ N\ r}{30}$$

For this particular bearing η = .25 and B = 3.82 in.

Results

Select either set of data from the previous section. For a particular manometer location and the slope used, determine the value of Kp applicable from the attached graph. With this, and the values of N, r, B, ν and h_2 used calculate the value of H expected. Compare this value to the height actually measured for that manometer with those conditions. Calculate the per cent discrepancy.

Conclusions

Prepare a proper laboratory report for the above set of experiments. Present all data in graphical form and compare the results with those expected in view of theory and empirical relationships given. Discuss any discrepancies and comment on the results.

Pin and Disc Machine for Fretting Wear

Theory

Fretting is a type of wear between two surfaces caused by a slight cyclic motion of one surface over the other. Because there is no net translation or rotation of the surfaces, any wear debris or other substance which gets trapped between the surfaces can influence the wear mode. Thus the wear regime may include not only adhesive but also abrasive and corrosive wear.

Part I

Objective

To demonstrate the phenomena of fretting wear in a dry environment.

Apparatus

Pin and disc wear apparatus complete with additions necessary for fretting experiment.

Procedure

Set up the apparatus as required for fretting. Start the motor running slowly and check the oscillations of the disc. When the apparatus is running smoothly, choose a test pin, insert it into the holder and place the wear on it.

Set the motor running at about 275 rpm (1750/8) and after making a series of time and wear measurements, plot the results to get the wear rate. Compare this with the values obtained for dry wear. Also obtain a sample of the wear debris for inspection.

Part II

Objective

To demonstrate the effect of the environment on the fretting wear rate.

Procedure

Repeat Part I but use salt water or a weakly acidic solution on the disc. Again compare results, and collect a sample of the debris for inspection.

Conclusions

Prepare a proper laboratory report for the above set of experiments. Analyse the debris and speculate on its nature and chemistry. If suitable equipment is available (X-ray diffraction) at the institution a proper determination of debris composition can be made. Comment on the results:

6.3 Four-Ball Machine - Failure Apparatus

Theory

Rolling elements can fail in a variety of ways and the failure may be instigated by one or more of several mechanisms. The illustration below outlines some of the major causes and/or forms of rolling element and journal bearing failure.

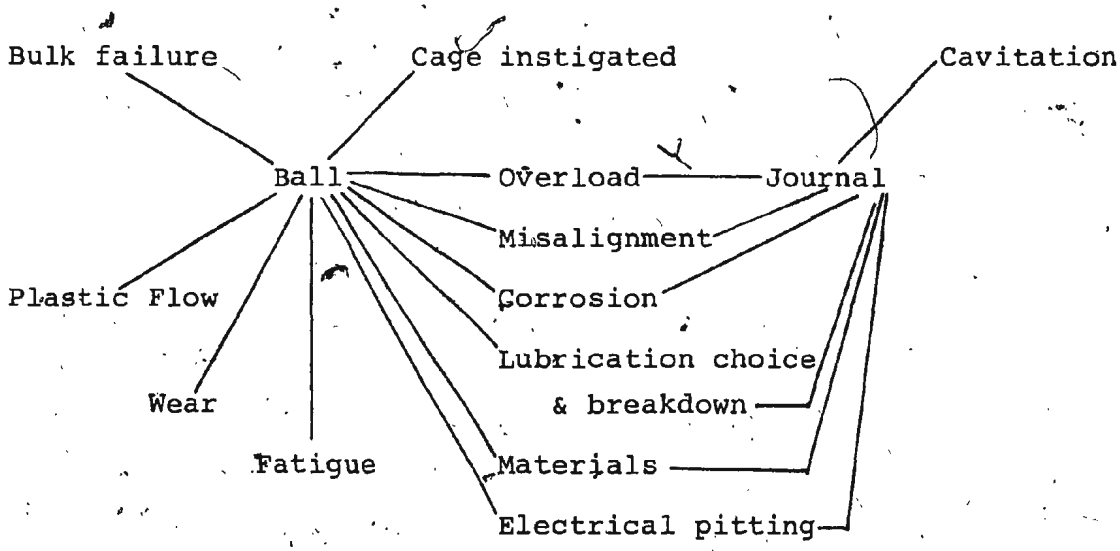

Detailed description of each should be given in accompanying lectures and the manual on ball roller bearing damage - "Interpreting Service Damage in Rolling Type Bearings" published by ASLE is an invaluable aid while interpreting the results of the following experiments.

The experiments chosen here serve to illustrate primarily the effect of load and lubricant selection on bearing life. The student may, however, in consultation with

his instructor design his own experiment concerning other aspects of rolling element failure.

Part I

Objective

To demonstrate the effect of load on failure of ball bearings.

Apparatus

Four-ball machine complete with hydraulic ram; test balls; stroboscope; test lubricants; stop watch.

Procedure

The apparatus should already be assembled. Be sure the shaft end and bearing balls are thoroughly cleaned, and the oil to be used is filtered. Fill the bearing cup and holder with the oil to be used, and with the balls in place, put the loading head into the ram. Apply enough pressure to the hydraulic ram so that the balls just come in contact with the shaft. Start the motor running and allow the rig to run slowly under no load, to be sure everything is running

* These experiments can be very time consuming and would best be performed as a term project for a small group of students.

smoothly. Then increase the speed (if speed control is available) and load to the desired settings and start timing the operation. When the machine has attained a steady speed use the stroboscope to measure the rpm of the shaft. Run the machine to failure and note the time required. Repeat until enough values are obtained to be significant (5-10 depending on spread). Increment the load and rerun the experiment. Continue until a number of sets of failure data at different loads have been obtained.

Part II

Objective

To demonstrate the effect of lubricating oil on failure of ball bearings.

Procedure

Repeat the procedure of Part I, except this time make all runs at constant load but with different lubricants each time. Oils which can be used can be of varying grades or in various conditions. For example, unused motor oils can be compared to the same oil after a period of time in service. Also the effect of additives in the oil can be evaluated.

Conclusions

Prepare a laboratory report for the above set of experiments. Analyse the data of Part I to try to determine a functional relationship between failure time and load. In Part II, try to compare the relative qualities of the oils used. In both cases, analyse the balls themselves and try to identify the type of failure, and check to see if failure mode changes with load or lubricant.

REFERENCES AND BIBLIOGRAPHY

1 AKERS, A. A Simple Journal Bearing Demonstration. Bull. Mech. Engng. Educ. Vol 8, pp. 207-210.

2 ALLAN, R.K. Rolling Bearings 3rd Ed. Sir Isaac Pittman & Sons Ltd. London. 1964.

3 ARCHARD, J.F. From Friction-Selected Preprints. American Journal of Physics Vol 32, No 8 (1961).

4 BARRY, H.F. and J.P. Binkelman. A wear tester for the evaluation of gear oils. Lubric. Engng. (1971).

5 BOOTHROYD, G. A simple method for determining the coefficient of sliding friction. Bull. Mech. Engng. Educ. Vol 9, pp. 219-223.

6 BOYD, J. Lubrication Phenomena - Use of Transparent Models for the Purposes of Demonstration and Study. Mechanical Engineering, Vol 70, (1948), p. 589.

7 BREMBLE, G.R. and B.G. Brothers. An experimental investigation into the friction and wear characteristics of unlubricated roller bearings. Wear, 17, (1971), 165-183.

8 BROWN, E.D. Jr. Friction and wear testing with the modern four-ball apparatus. Wear, 17, (1971), 381-388.

9 BUCKLEY, H. and S.V. Pepper. Elemental Analysis of a friction and wear surface during sliding using Auger spectroscopy. ASLE Trans. Vol 15, 4, 252-260.

10 CAMERON, A. Teaching of Hydrodynamic Lubrication Using Scaled Models. Proc. Instn. Mech. Engrs. Vol 184 Pt 1, No 27, 1969-70, pp. 475-486.

11 CARDY, D.F. and J. W. Caplehorn. The Experimental Determination of the Pressure Distribution in a Hydrodynamic Journal Bearing. Bull. Mech. Engng. Educ. 1968, 7, 281.

12 CARSON, R.M. and K.L. Johnson. Surface corrugations spontaneously generated in a rolling contact disc machine. Wear 17 (1971) 59-72.

13 CATALOG OF FRICTION AND WEAR DEVICES. ASLE. 1973

14 CHILDS, T.H.C. and D. Tabor. From Experimental Methods in Tribology by P.B. Neal. Review Paper 2. Proc Instn Mech Engrs 1967-68 Vol 182 Pt 3G.

15 CHIU, Y.P., T.E. Tallian and J.I. McCool. An engineering model of spalling fatigue failure in rolling contact. I The subsurface model. Wear 17 (1971) 433-446.

16 CLAUSS, F.J. Solid Lubricants and Self Lubricating Solids. Academic Press. 1972.

17 CONFERENCE PROCEEDINGS. 14-16 April 1970 Institute of Tribology, University of Leeds. Teaching Tribology. Iliffe Science and Technology Publications Ltd.

18 CROOK, A.W. The lubrication of rollers IV. Measurements of friction and effective viscosity. Phil. Trans. Roy. Soc. A. (1963) 255, 281.

19 CZICHOS, Horst. Tribology. Elsevier Scientific Publishing Company ISBN 0-444-41676-5 (Vol 1) 1978.

20 DAVIS, A.J. and T.V. Krok. Sleeve bearings Part I. Development of a testing machine. Proc. Instn. Mech. Engrs. (1955) 169, 716.

21 DEPARTMENT OF TRADE AND INDUSTRY. U.K. Education and Training Committee. Tribology Projects for Schools. 1972.

22 DEYBER, P. and M. Godet. Contact temperatures in mixed friction. Tribology (1971).

23 DOWSON, D. Laboratory Experiments and Demonstrations in Tribology; 1 - Transparent Thrust and Journal Bearing Models. Tribology, Vol 1 No 2 (1968), p. 104.

24 --------. Laboratory Experiments and Demonstrations in Tribology; 2 - the Principles of Hydrodynamic Lubrication. Tribology, Vol 1 No 3 (1968), p. 150.

25 --------. Laboratory Experiments and Demonstrations in Tribology; 5 - Experiments on Rolling Element and Hydrodynamic Journal Bearings. Tribology, Vol 2 No 2 (1969), p. 116.

26 --------. Laboratory Experiments and Demonstrations in Tribology; 6 - Self-acting gas Lubricated Journal Bearings. Tribology Vol 2 No 6 (1969), p. 172.

27 --------. Laboratory Experiments and Demonstrations in Tribology; 7 - Externally Pressurised Air Lubricated Thrust Bearings. Tribology Vol 2 No 4 (1969), p. 217.

28 EDUCATION SUB-COMMITTEE OF THE ASSOCIATE COMMITTEE ON LUBRICATION (TRIBOLOGY), National Research Council of Canada. Part I - Survey of Institutions. 1973.

29 --------. National Research Council of Canada. Part II - Tribology Courses. 1978.

30 --------. National Research Council of Canada. Classified List of Titles of Practical Articles selected from Recent Issues of Tribology Periodicals. NRCC No 14427 1974.

31 ERNST, H. and M. Merchant. From Friction - Selected Preprints. Surface friction of clean metals - A basic factor in the metal cutting process, preprinted from American Journal of Physics Vol 31 No 12 (1963).

32 ETTLES, C.M.M. From Experimental Methods in Tribology by P.B. Neal. A comparison of some instrumentation methods for hydrodynamic bearings. Proc. Instn. Mech. Engnrs. 1967-68 Vol 182 Pt 3G.

33 FAIRES, V.M. Design of Machine Elements 4th Ed. The Macmillan Company. 1965.

34 FILATOV, P.G. et al. Laboratory instrument for assessing the antiwear properties of engines oils, hydraulic fluids and jet fuels. UDC 620.178.16.05: 662.75 Russian Engineering Journal Vol L No 2.

35 FORBES, W.G. Lubrication of Industrial and Marine Machinery 2nd Ed. John Wiley & Sons, Inc. 1954.

36 FULLER, D.D. Theory and Practice of Lubrication for Engineers. John Wiley & Sons, Inc. 1956.

37 GENTLE, C.R. Limits of Lubrication. Tribology (1971).

38 GOHAR, R. From Experimental Methods in Tribology by P.B. Neal. A ball and plate machine for measuring elastohydrodynamic oil films. Proc. Instn. Mech. Engnrs. 1967-68 Vol 182 Pt 3G.

39 --------. Education in tribology. Mécanique Matériaux Electricité, 268 pp. 42-46 (1972).

40 GRIFFIN, G.J.L. Friction tests apparatus for moulded plastic specimens. Wear 17 (1971), 399-405.

41 GROSEK, A.J. and R.E. Witheridge. Surface properties and lubricating action of graphite and MoS_2. ASLE Trans. Vol 14 4 254-266.

42 HALLING, J. A crossed-cylinder wear machine and its use in the study of severe wear of brass on mild steel. Wear 4 (1961), 22-31.

43 --------. Principles of Tribology. The Macmillan Press Ltd. SBN 333 15496 7. 1975.

44 HARRIS, T.A. Rolling Bearing Analysis. John Wiley & Sons Inc. 1966.

45 HEHN, H. Effects of friction and wear on a sealing interface. Lubric. Engng. (1970).

46 HIGHAM, C.E. Lubricants and lubrication equipment. Engineering Materials and Design (1971).

47 HIRST, W. From Experimental Methods in Tribology by P.B. Neal Review Paper 3. Basic Principles of Wear Testing. Instn. Mech. Engrs. 1967-68 Vol 182 Pt 3G.

48 HOLINSKI, R. and J. Gransheimer. A study of the lubricating mechanism of molybdenum disulfide. Wear 19 (1972), 329-342.

49 I.P. Gear Lubricants Rig Tests Sub-Panel. Operating conditions in gear test rigs with automobile gear box gears in service. Journal of the Institute of Petroleum Vol 57 No 558 (1971).

50 KETTLEBOROUGH, C.F., B.R. Dudley and E. Baildon. Mitchell bearing lubrication. Proc. Inst, Mech. Engnrs. (1955) 169 746.

51 KRAGELSKII, I.V. Friction and Wears. Butterworths, London (1965).

52 LIVESAY, B.R. and R.B. Belser. Instrument for measuring small frictional forces. ASLE Trans. V12 1969.

53 MERRITT, E. Worm Gear Performance. The I. Mech. E. (1935).

54 MIKHEEV, V.A. and K.A. Semenov. An integrated method for testing lubricants on a four-ball fraction [sic] machine. UDC 621.892: 620.178.162 Translated from Khimiya i Tekhnologiya Topliv i Masel, No. 10, pp. 44-50 (1969).

55 -------- and T.P. Chernikova. Correlated Index of Lubricating capacity with tests in a four-ball machine. UDC 621.891.22: 620.178.162 Translated from Khimiya i Tekhnologiya Topliv i Masel, No. 12, pp. 49-51 (1969).

56 MINISTRY OF TECHNOLOGY Productivity Services and Information Division Techlink No. 560. Examination of Used Lubricant Oils at Elevated Temperatures.

57 MØLGAARD, J. A coefficient of friction which increases with increasing load. Results with undrawn nylon monofilaments, and a theoretical explanation. Proceedings of the Physical Society Vol 79 Part 3 No. 509 (1962).

58 NEAL, P.B. Experimental Methods in Tribology. Proc. Insth. Mech. Engrs. 1967-68 Vol 182 Pt 3G.

59 O'CONNOR, J.J. and J. Boyd. Standard Handbook of Lubrication Engineering. McGraw-Hill Book Company. 1968.

60 OSTMO, O. How to select shaft seal materials. Lubrication Engineering Vol 29 6 240-243 (1973).

61 PALMGREN, A. Ball and Roller Bearing Engineering 3rd Ed. S.H. Burbank & Co., Inc., Philadelphia. 1959.

62 PETERSON, M.B. Simulating Wear Conditions in Tests. ASME Paper 72-DE-43.

63 PETROVA, L.N., B.A. Frenkel, L.N. Sentyurikhina and V.S. Ivanova. Apparatus for determining the adhesion of solid Lubricating Coatings to metal surfaces. UDC 667.494.7: 678.029.87 Translated from Khimiya i Tekhnologiya Topliv i Masel, No. 9, pp. 58-61 (1969).

64 PIGOTT, R.J.S. and B.R. Walsh. Universal bearing tester. Transactions of the ASME (1957).

65 PITERNICK, A.B. Guide to Sources of Information on Tribology (Wear, friction, lubrication). National Science Library. 1974.

66 PYWELL, R.F. An optical method of studying piston ring scuffing. Tribology (1971).

67 QUINEY, R.G. and W.E. Boren. Moving Film - Stationary Sled Friction Apparatus. Lubric.Engng.(1971).

68 ROGERS, M.D. The mechanism of scuffing in diesel engines. Wear 15 (1970), 105-116.

69 SCOTT, D. and J. Blackwell. N E L Rolling Contact Tests - Accelerated Service Tests for Lubricants and Materials for Rolling Elements. Wear 17 (1971), 323-333.

70 TALLIAN, T.E. Rolling Contact Failure Control through Lubrication. Proc. Instn. Mech. Engrs. 1967-68 Vol 182 Pt 3A.

71 TECHNICAL COMMITTEE ON BEARINGS AND BEARING LUBRICATION. Interpreting Service Damage in Rolling Type Bearings. 7th Ed. ASLE. 1971.

72 VEST, C.E., J. Courtney, and J.J. Farrell. Evaluation of Gear Materials for Space Applications. Lubric.Engng. (1970).

73 WAIGHT, F.H. From Experimental Methods in Tribology by P.B. Neal. Proc. Instn. Mech. Engrs. 1967-68 Vol 182 Pt 3G.

74 WILCOCK and Booser. Bearing Design and Application. McGraw-Hill Book Company, Inc. 1957.

75 WILKES III, A. and Philip F. Donley. An analysis and development of a dry seal mechanical shaft seal concept. Journal of the American Society of Lubrication Engineers (1970).

APPENDIX

DETAILED DRAWINGS USED TO CONSTRUCT THE EQUIPMENT DESCRIBED IN THIS PROJECT

Note: Because additions and alterations have to be made to it, only the arrangement is given for the four-ball test machine.

Drawings - Coefficient of Friction Device

COEFFICIENT OF FRICTION DEVICE

DESCRIPTION :-

THE DEVICE CONSISTS OF A CARRIER OR TROLLEY TO WHICH CAN BE ATTACHED BARS OF VARIOUS MATERIALS. THE TROLLEY RUNS INSIDE A TRAY AND PLACED IN FRONT OF THE BAR BUT LYING ON THE TRAY IS A SLIDER. TEST PINS ARE PLACED IN THE SLIDER AND AS THE TROLLEY IS MOVED ALONG THE TRAY, THE SLIDER MOVES ON THE BAR. THE FINAL LOCATION OF THE SLIDER AFTER A PRESCRIBED DISTANCE OF TRAVEL DEPENDS ONLY ON THE COEFFICIENT OF FRICTION BETWEEN THE SLIDER AND BAR. THEREFORE THE COEFFICIENT OF FRICTION BETWEEN THE TWO TYPES OF MATERIAL CAN BE READ OFF DIRECTLY FROM A SCALE ON THE TRAY.

THIS DEVICE IS TO BE CONSTRUCTED OF ¼" THK. PLEXIGLASS (EXCEPT FOR TEST PIECES)

WHEELS ARE INSERTED IN THE CARRIER FOR EASY RUNNING.

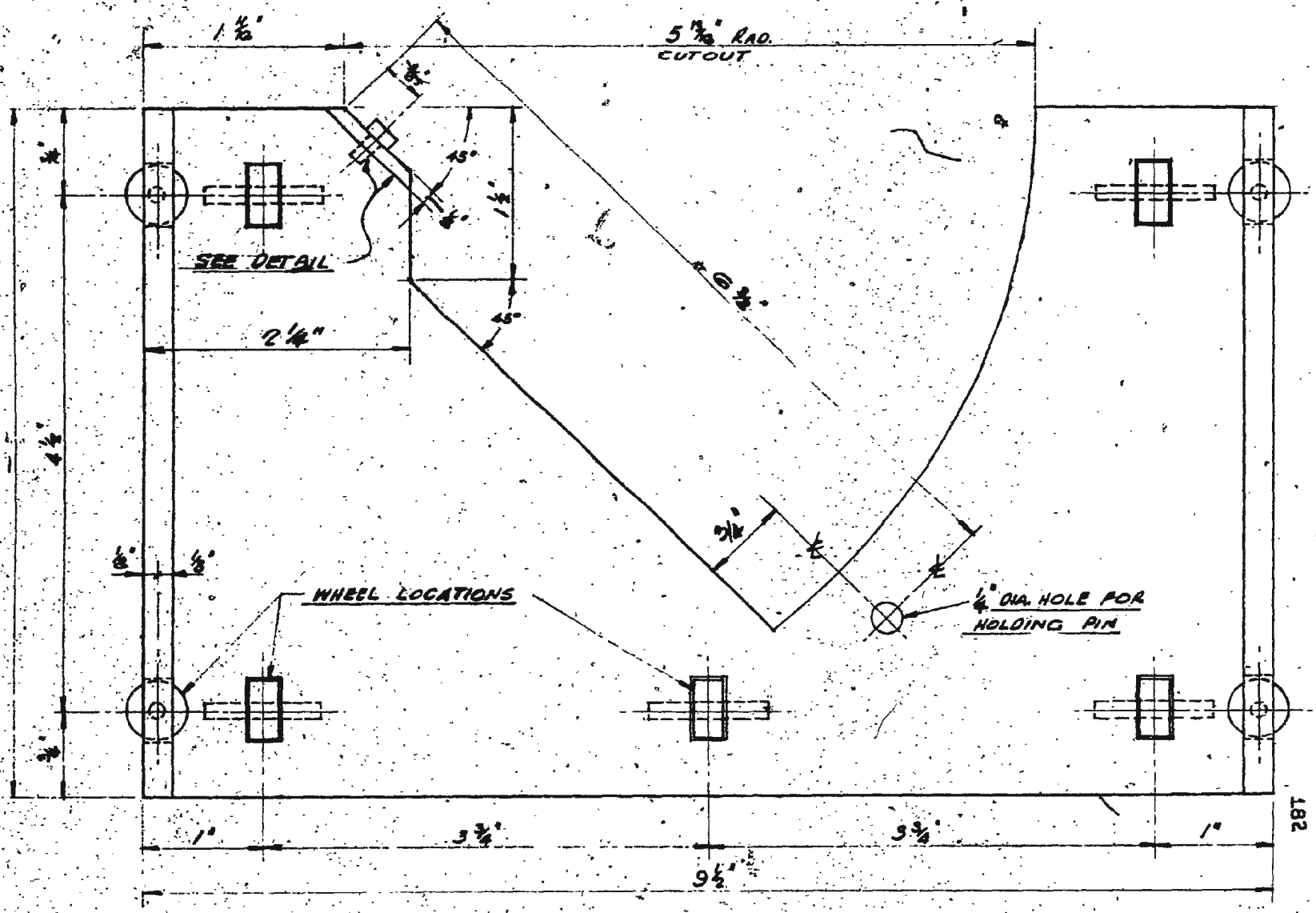

TOP VIEW ~ CARRIER NTS

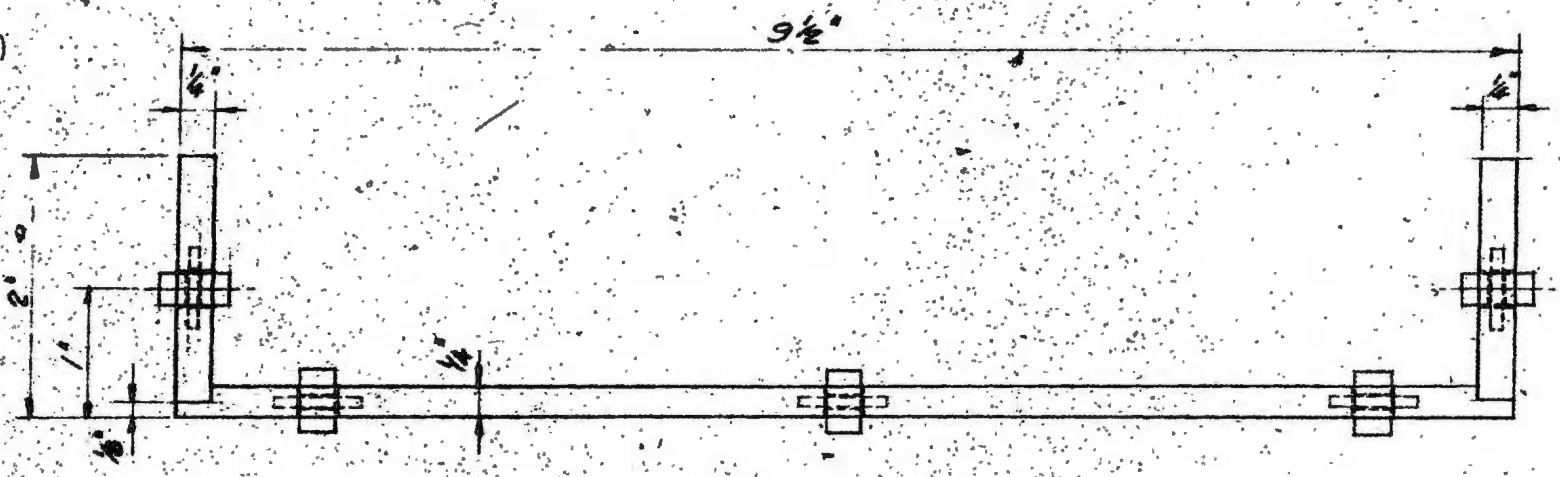

FRONT VIEW ~ CARRIER

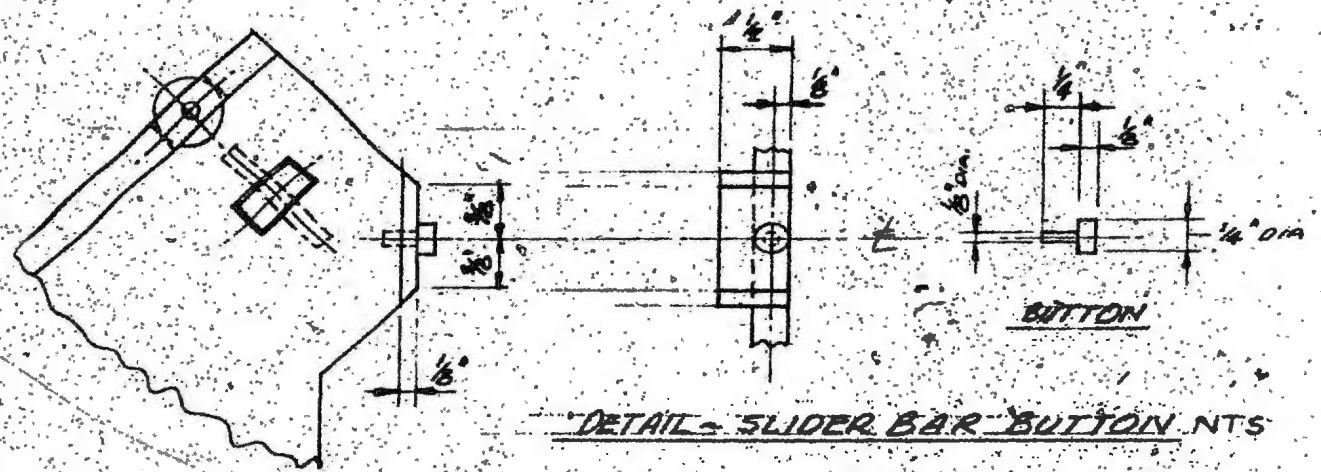

DETAIL ~ SLIDER BAR BUTTON NTS

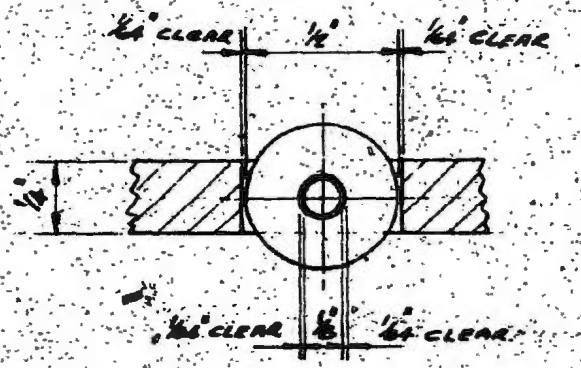

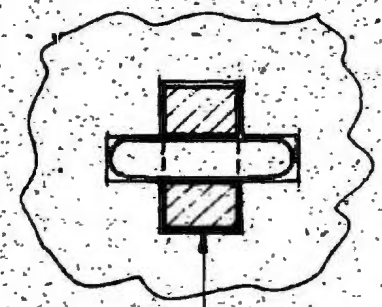

1/2" ϕ × 1/4" NYLON WHEEL RUNNING ON 1/8" ϕ PERSPEX PIN WELDED INTO 1/4" PERSPEX CARRIER

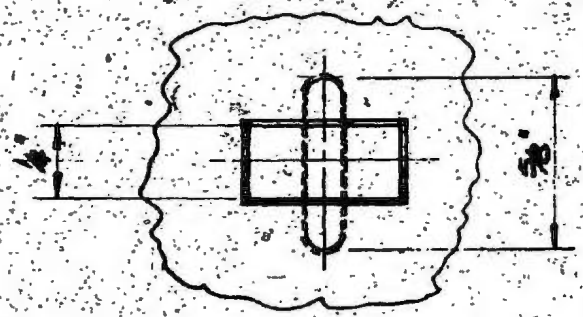

TYPICAL WHEEL DETAIL NTS

9 REQUIRED

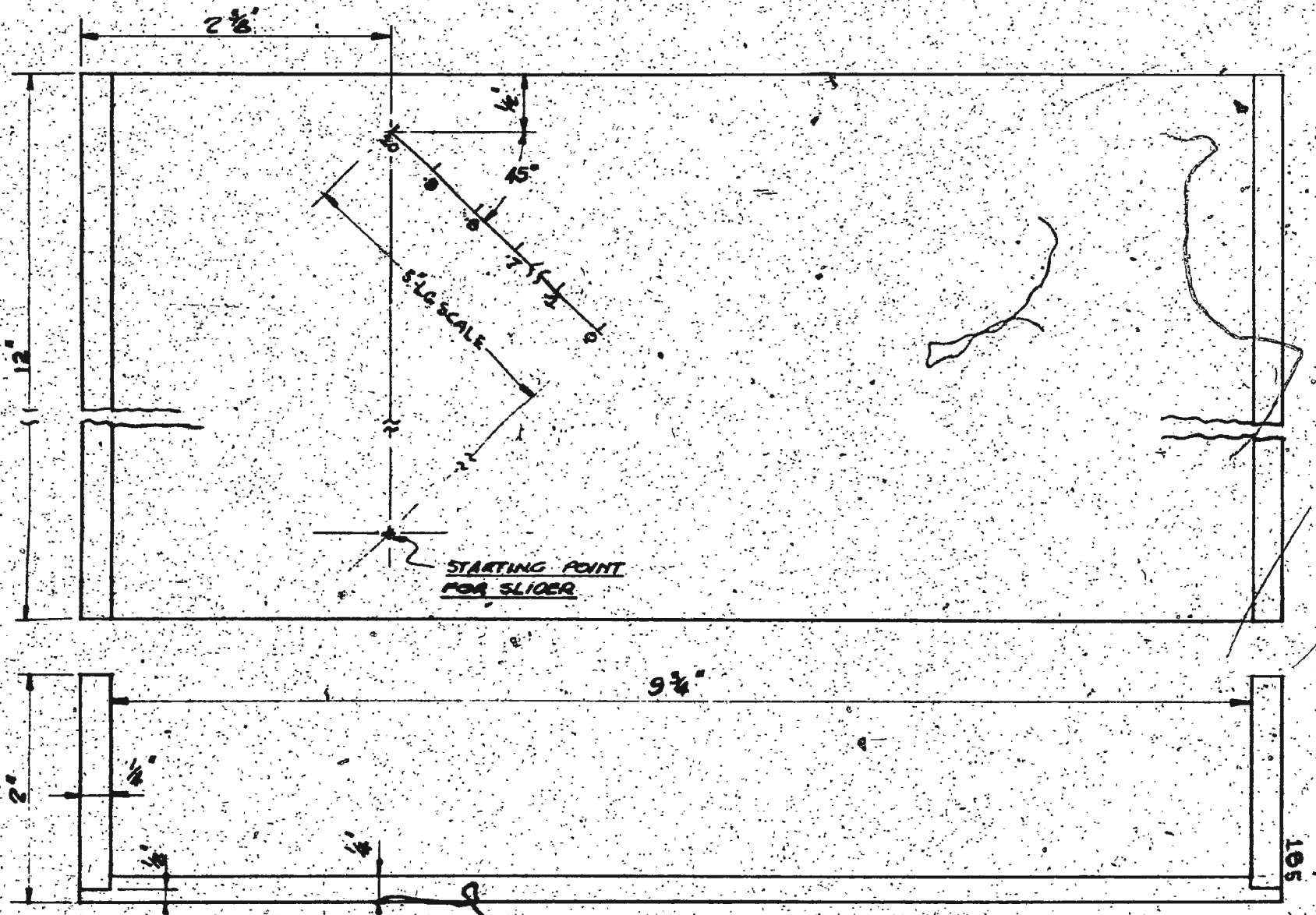
2 3/8"
1/4"
45°
7 1/4"
5" LG SCALE
12"
STARTING POINT
FOR SLIDER
9 3/4"
2"
1/4"
1/4"
1/4"
CARRIER TRAY NTS

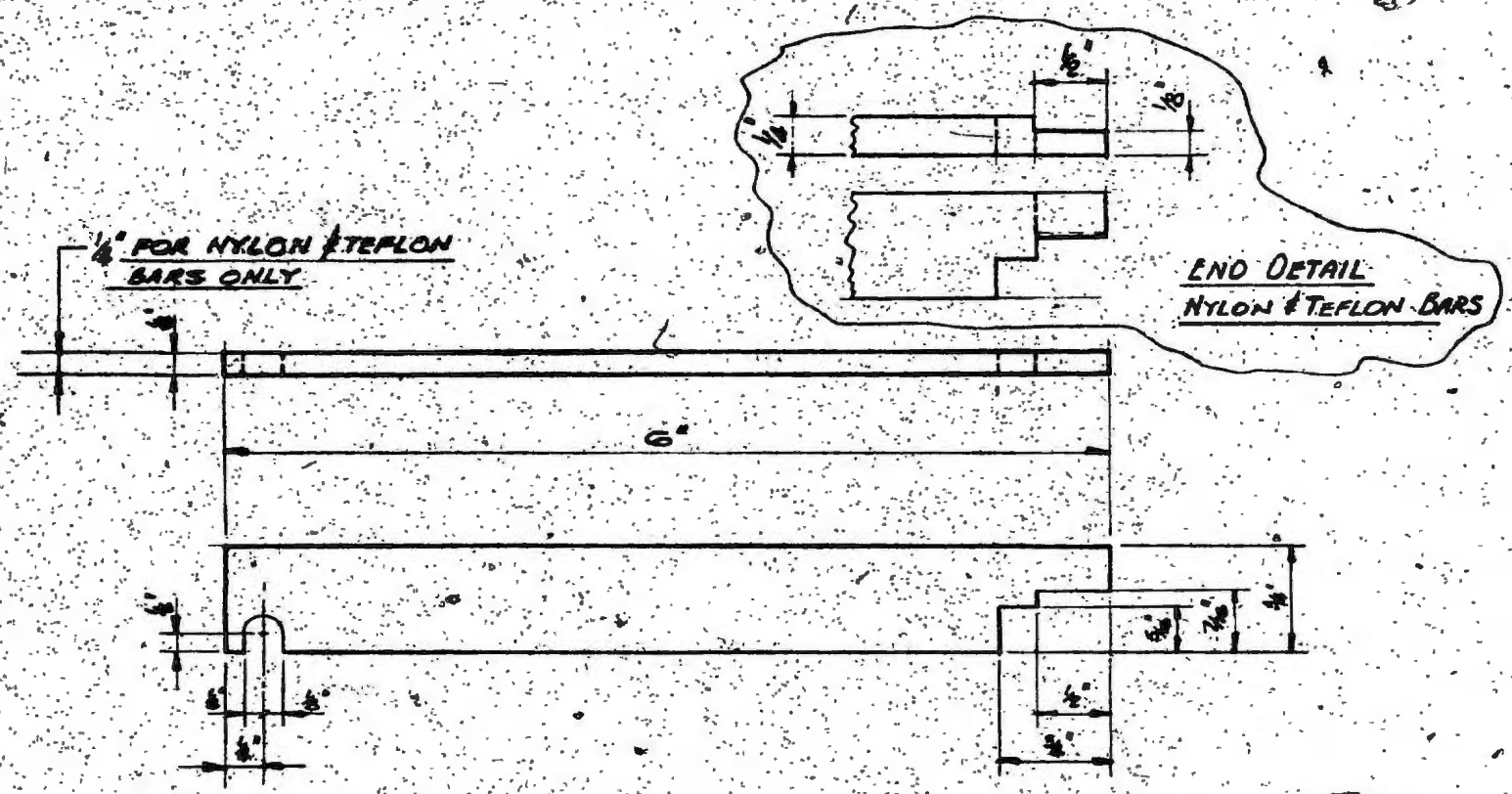

FABRICATE A TOTAL OF 5 BARS :- ONE EACH OF NYLON, TEFLON, BRASS, ALUMINUM & MILD STEEL. NYLON & TEFLON BARS SHALL BE 1/4" THICK.

SLIDER BAR NTS

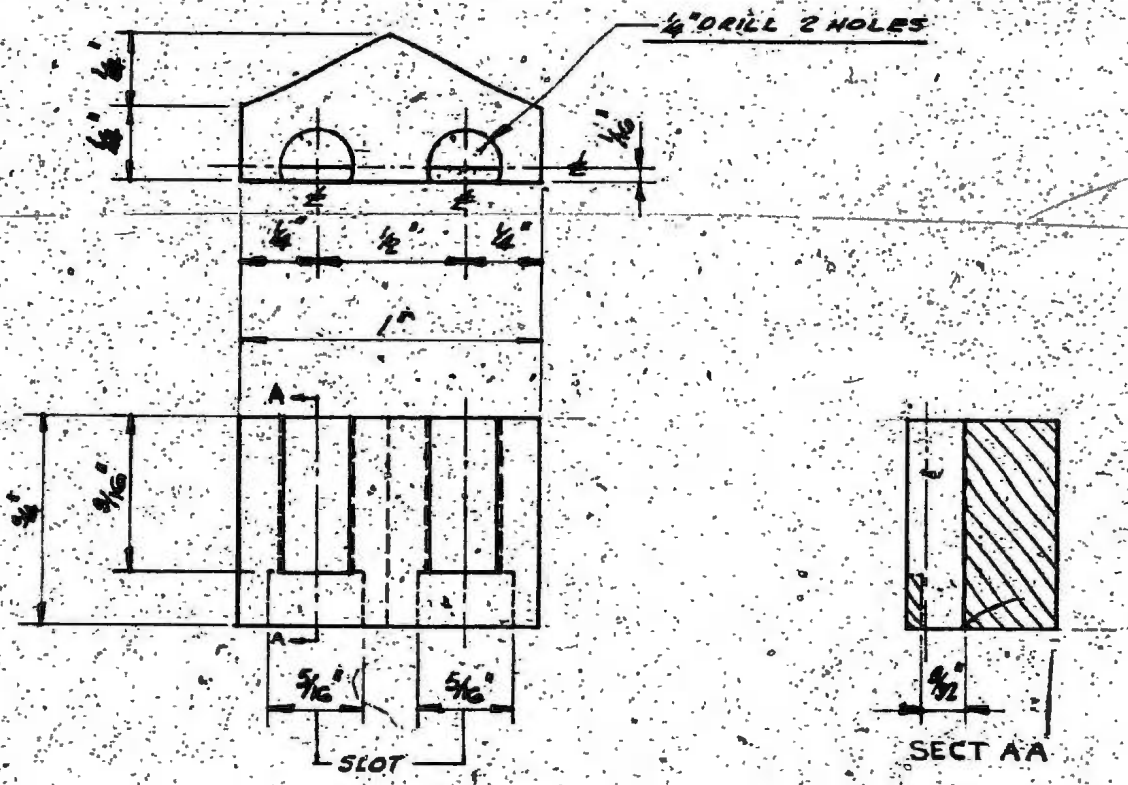

SLIDER NTS

MAT'L: BRASS ~ ONE REQ'D

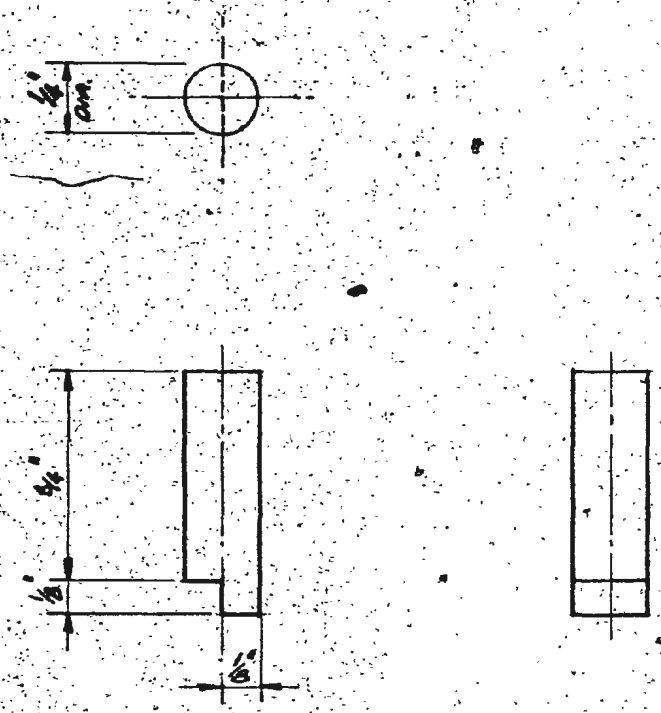

NOTE: PINS ARE TO FIT IN SLIDER WITHOUT ROTATING

2 PINS OF EACH MATERIAL NYLON, TEFLON, BRASS ALUMINUM & MILD STEEL ARE REQUIRED

TEST PINS NTS

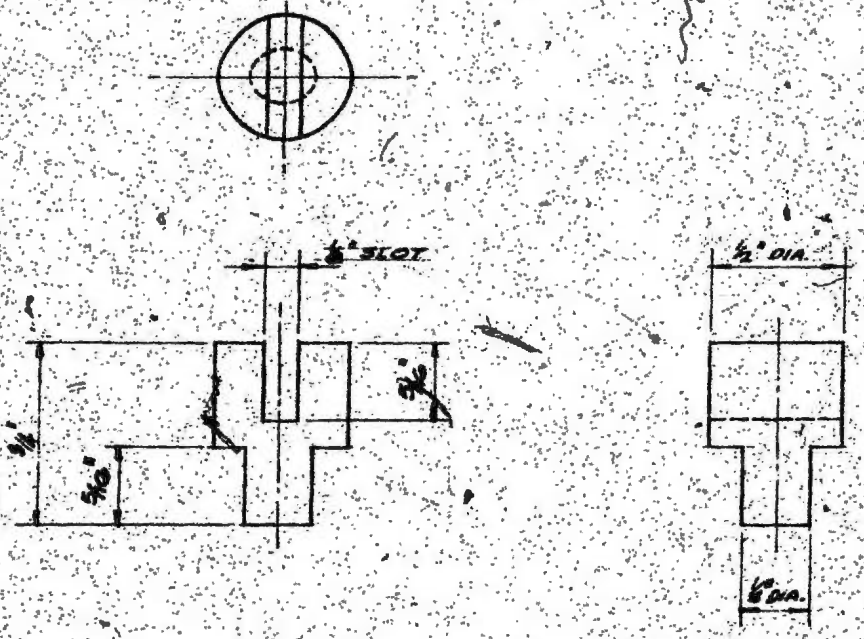

SLIDER BARS ARE TO REST IN THE SLOT IN THE HOLDING PIN

MAT'L – 1/2" ϕ PERSPEX ROD – ONE REQ'D

HOLDING PIN NTS

Drawings for Multipurpose Tribo-demonstrator

MULTI-PURPOSE TRIBO DEMONSTRATOR

FRAME DETAILS NTS

MATL - 1¼" x 1¼" x ⅛" ANGLE

ALL WELDED CONSTRUCTION

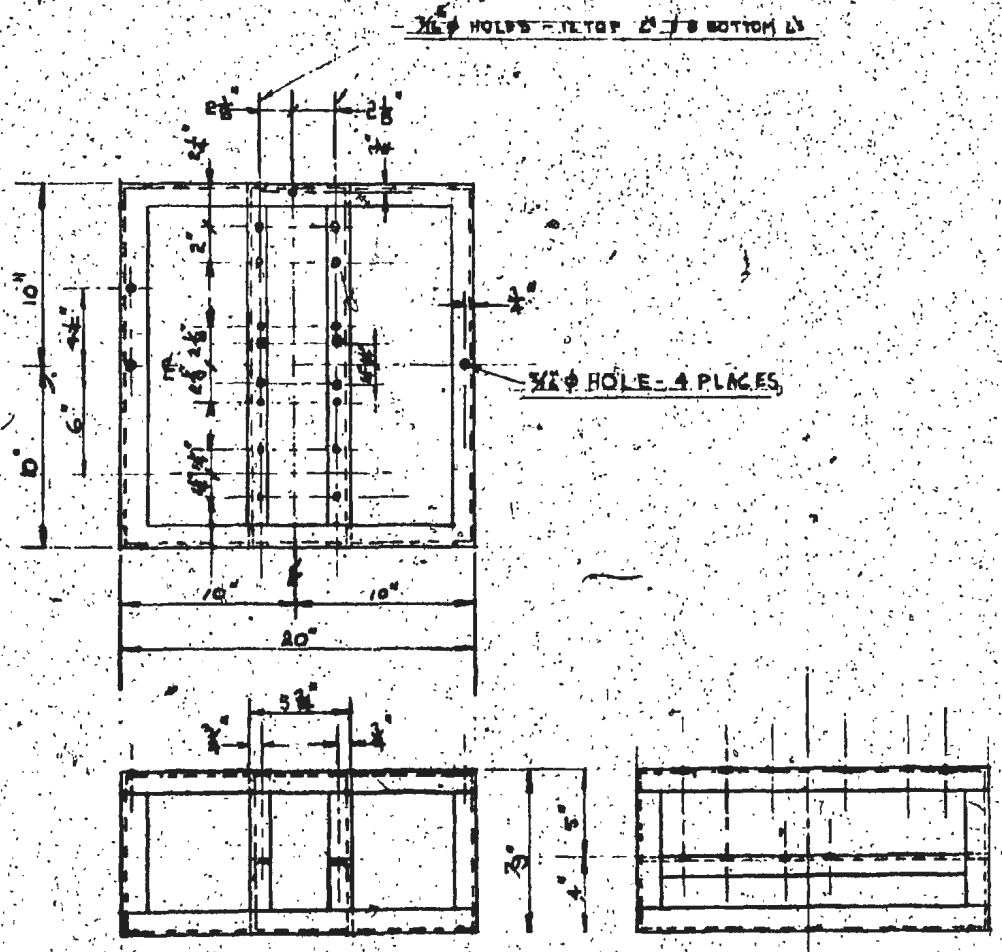

MULTI-PURPOSE TRIBO DEMONSTRATOR
MAIN SHAFT NTS
MAT'L STEEL

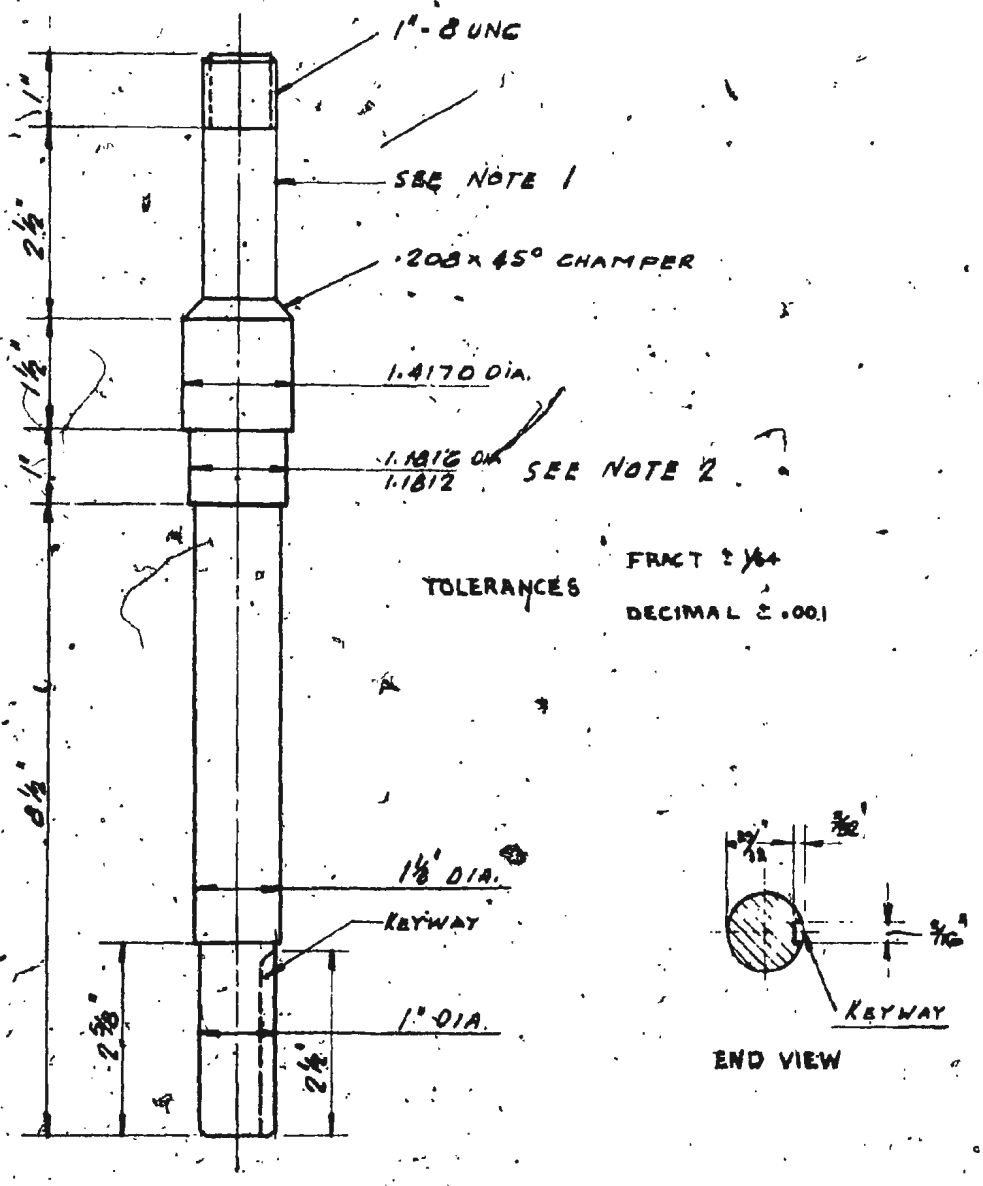

1. MACHINE TO FIT SNUGLY INTO TURNTABLE ITEM-1
2. MACHINE TO FIT INTO THRUST BEARING 720GB SKF

MULTI-PURPOSE TRIBO DEMONSTRATOR

THRUST BEARING PLATE NTS

MAT'L STEEL

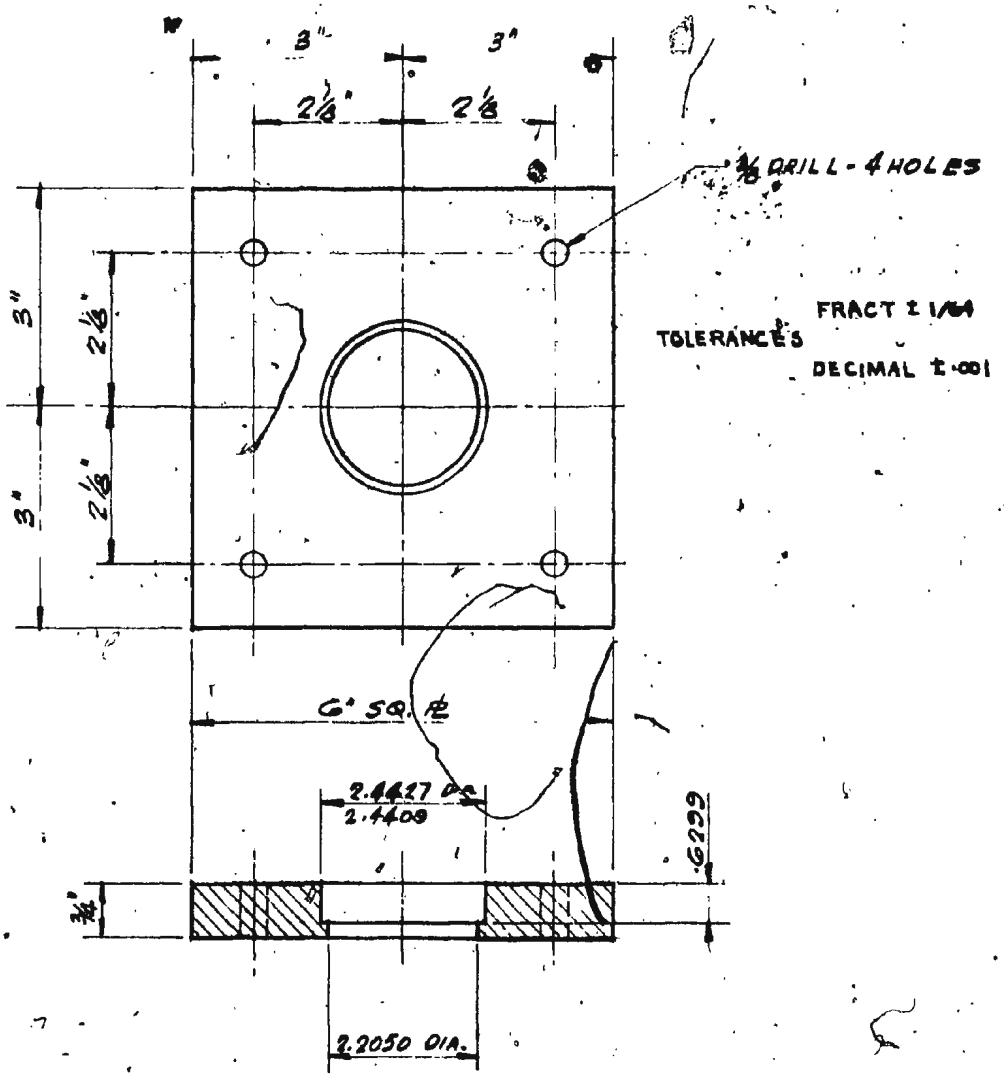

MULTI-PURPOSE TRIBO DEMONSTRATOR

SHAFT JOURNALS -3 REQ'D NTS

MAT'L STEEL WITH BEARING BRONZE INSERT

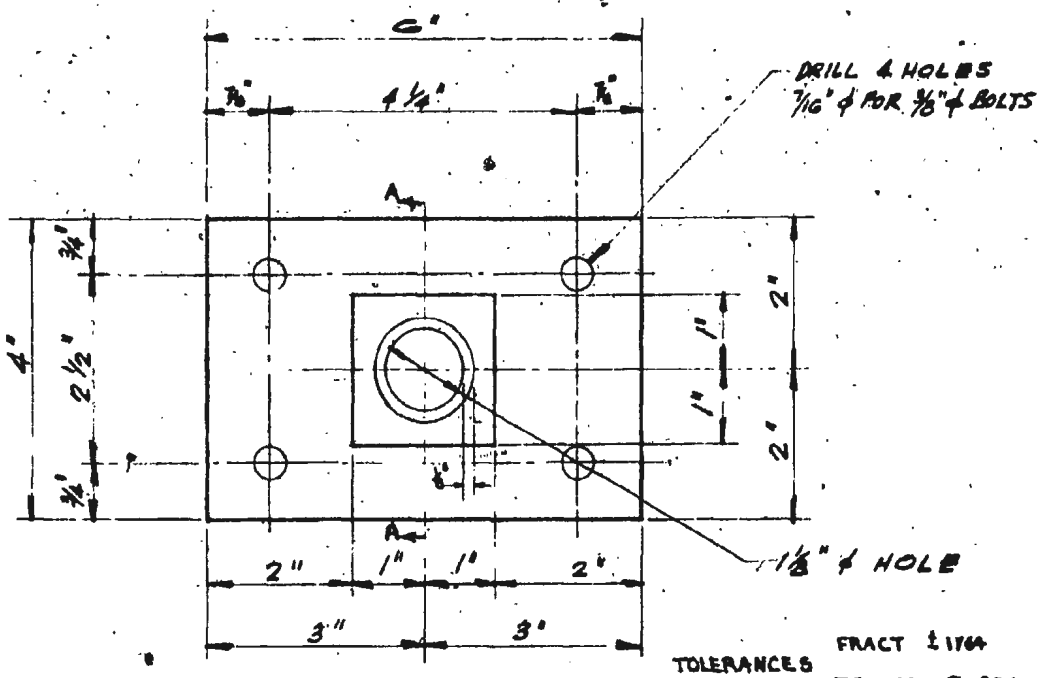

TOLERANCES FRACT ± 1/64
DECIMAL ± .001

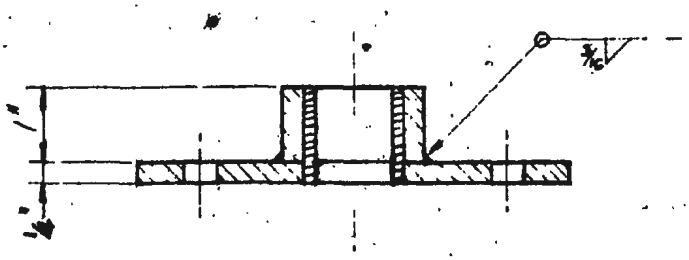

SECT AA

MULTI-PURPOSE TRIBO DEMONSTRATOR
ASSEMBLED FOR PIN & DISC AND FRETTING
WEAR EXPERIMENTS

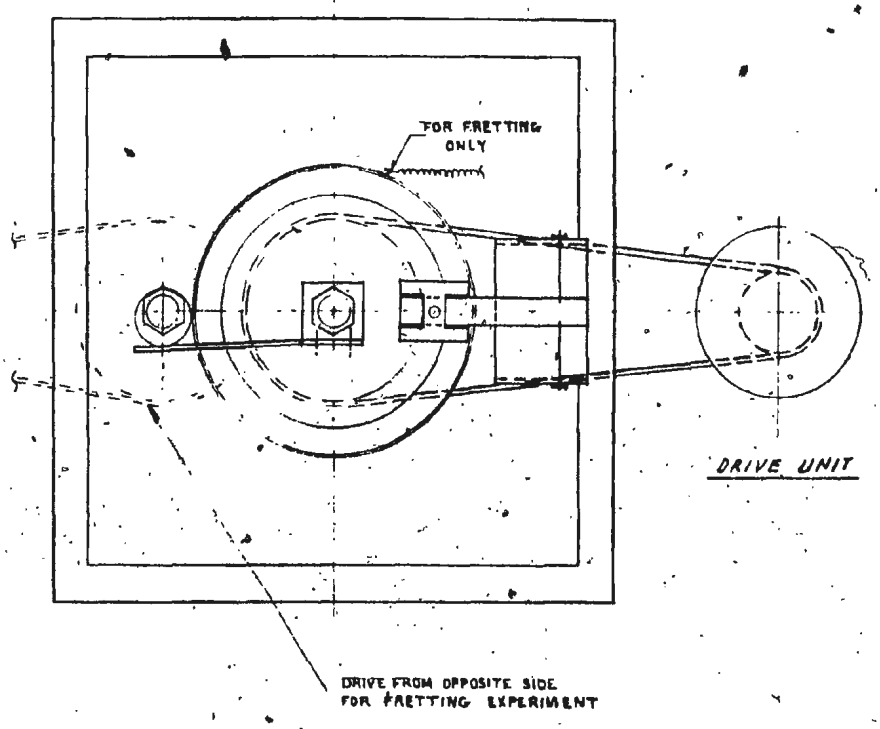

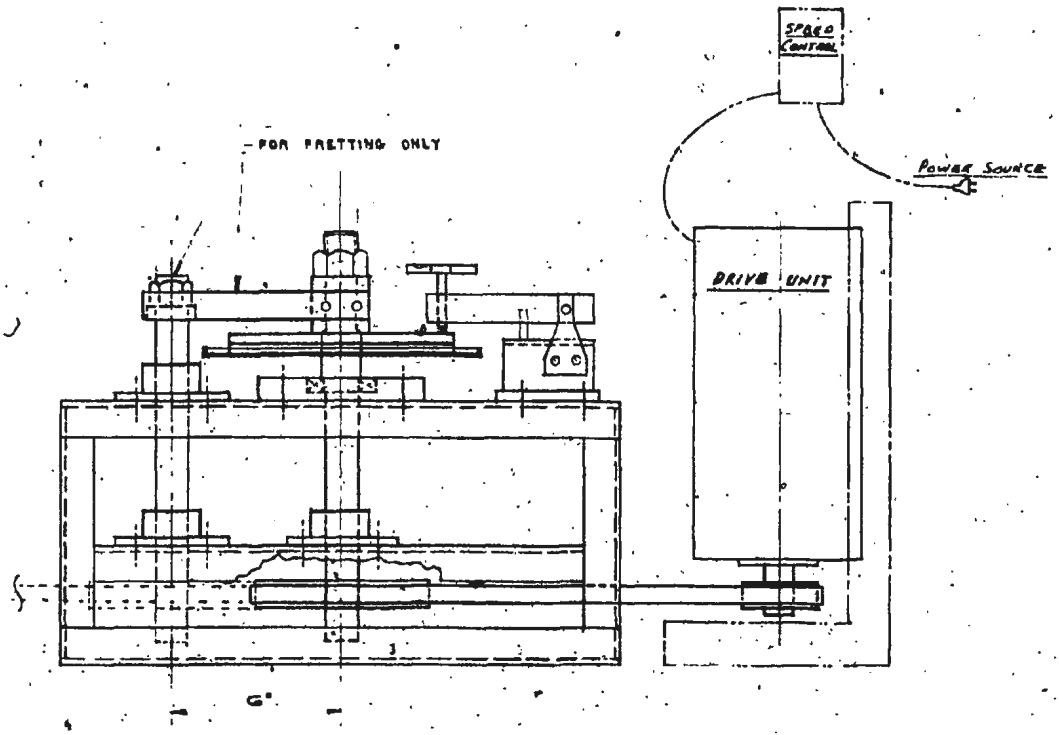

MULTI-PURPOSE TRIBO DEMONSTRATOR
WEAR ATTACHMENTS NTS
TURNTABLE BASE ITEM 1 PART 'A'
MAT'L STEEL ONE REQ'D

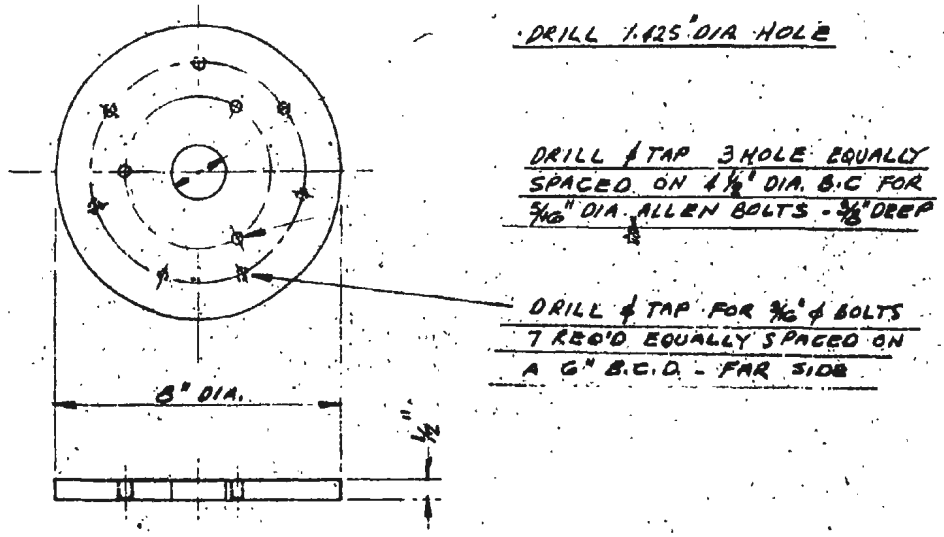

TURNTABLE HUB ITEM 1, PART 'B' NTS
MAT'L ~ STEEL
ONE REQ'D

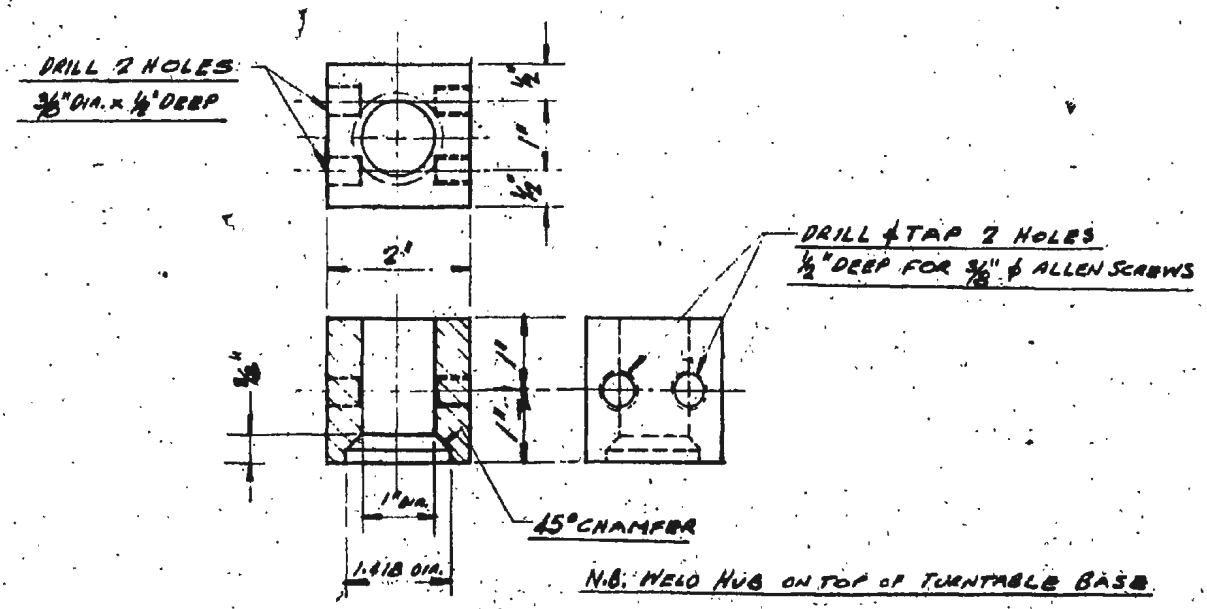

N.B. WELD HUB ON TOP OF TURNTABLE BASE

TOLERANCE FRACT. ± 1/64"

MULTI-PURPOSE TRIBO DEMONSTRATOR
WEAR ATTACHMENTS
OIL RING ITEM I PART 'C'
MAT'L 1/16" STEEL M.S PLATE

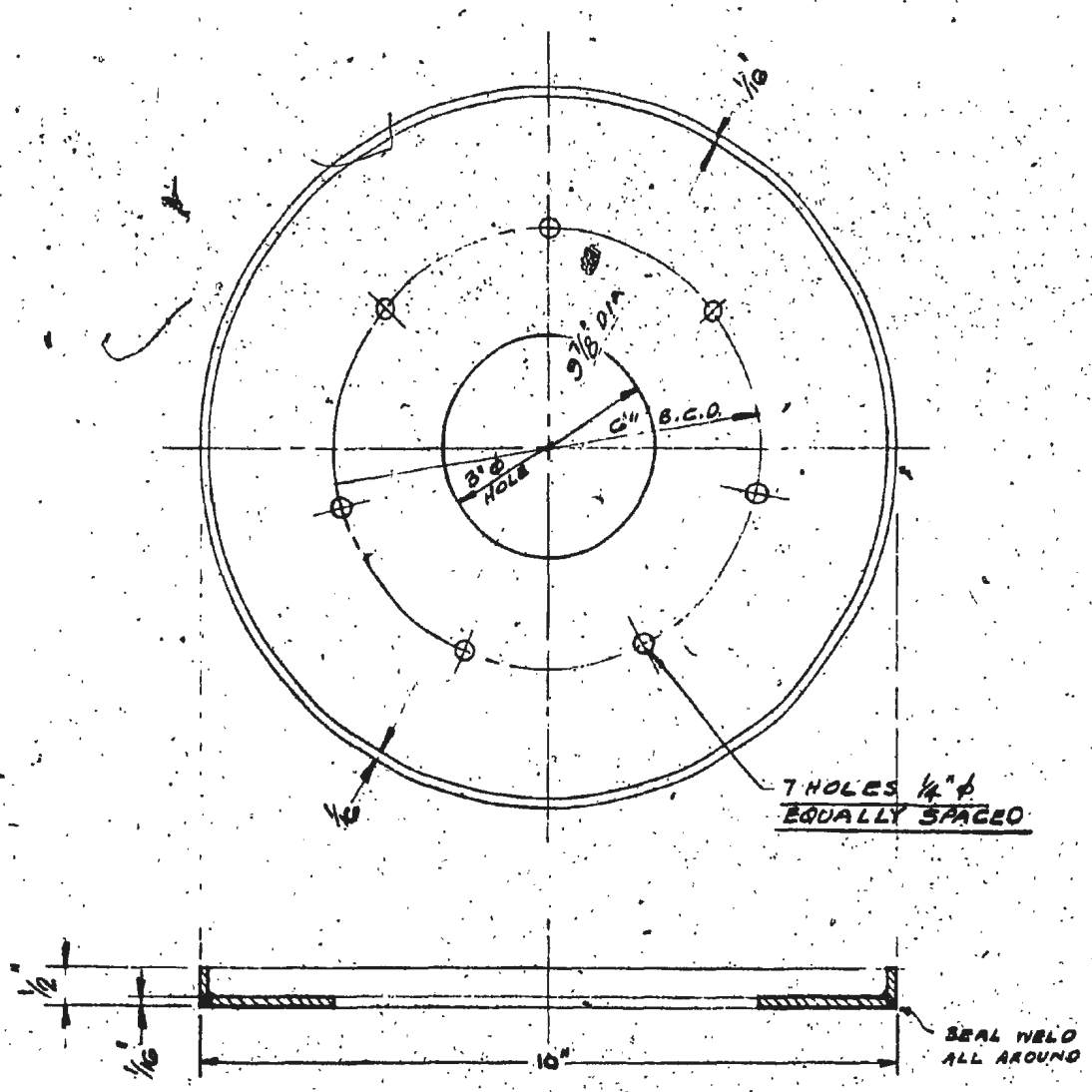

TOLERANCE FRACT ±1/64
DECIMAL ±.001

NOTE: WELD OIL RING TO UNDERSIDE OF PART 'A' TURNTABLE BASE

WEAR ATTACHMENTS

SHAFT BUSHING NTS.

ITEM - 2

MAT'L ~ STEEL

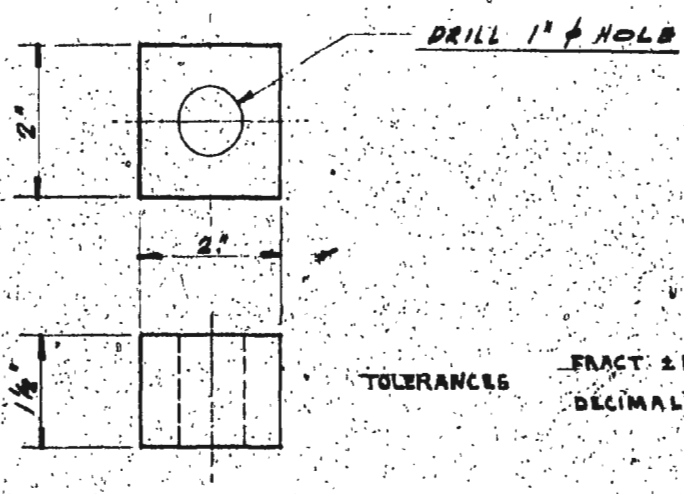

TOLERANCES FRACT ± 1/64
DECIMAL ± .001

TURNTABLE SPECIMEN

ITEM - 3

MAT'L ~ STEEL

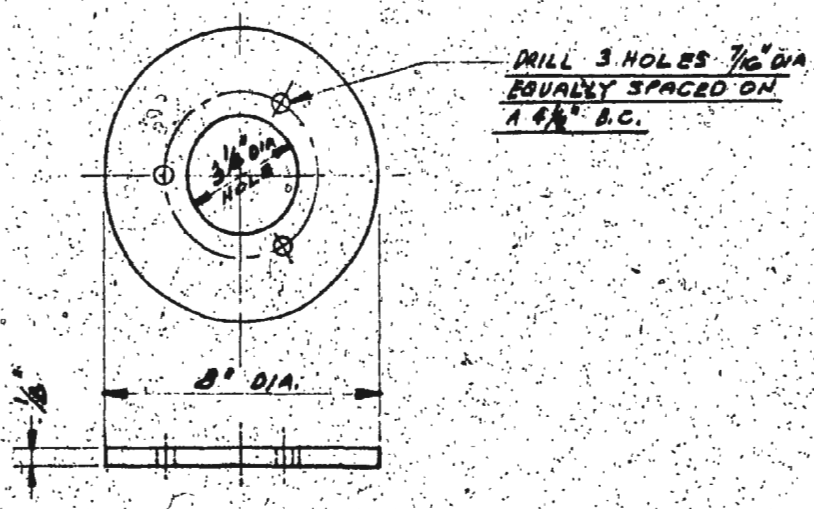

WEAR ATTACHMENTS

BASE PLATE - ITEM - 4 NTS

MAT'L - STEEL

ONE REQ'D

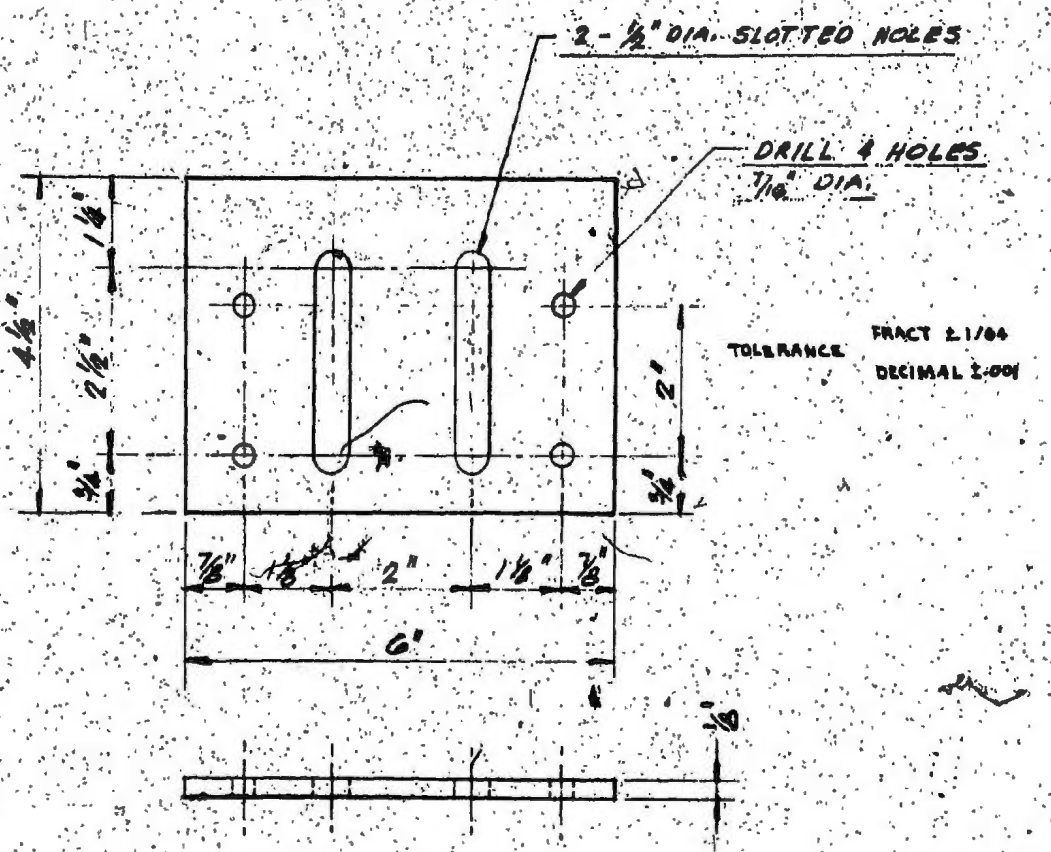

WEAR ATTACHMENTS

SUPPORT BLOCK - ITEM - 5 NTS

MAT'L ~ C 5" x 1 3/4" x 1.67 LB

ONE REQ'D

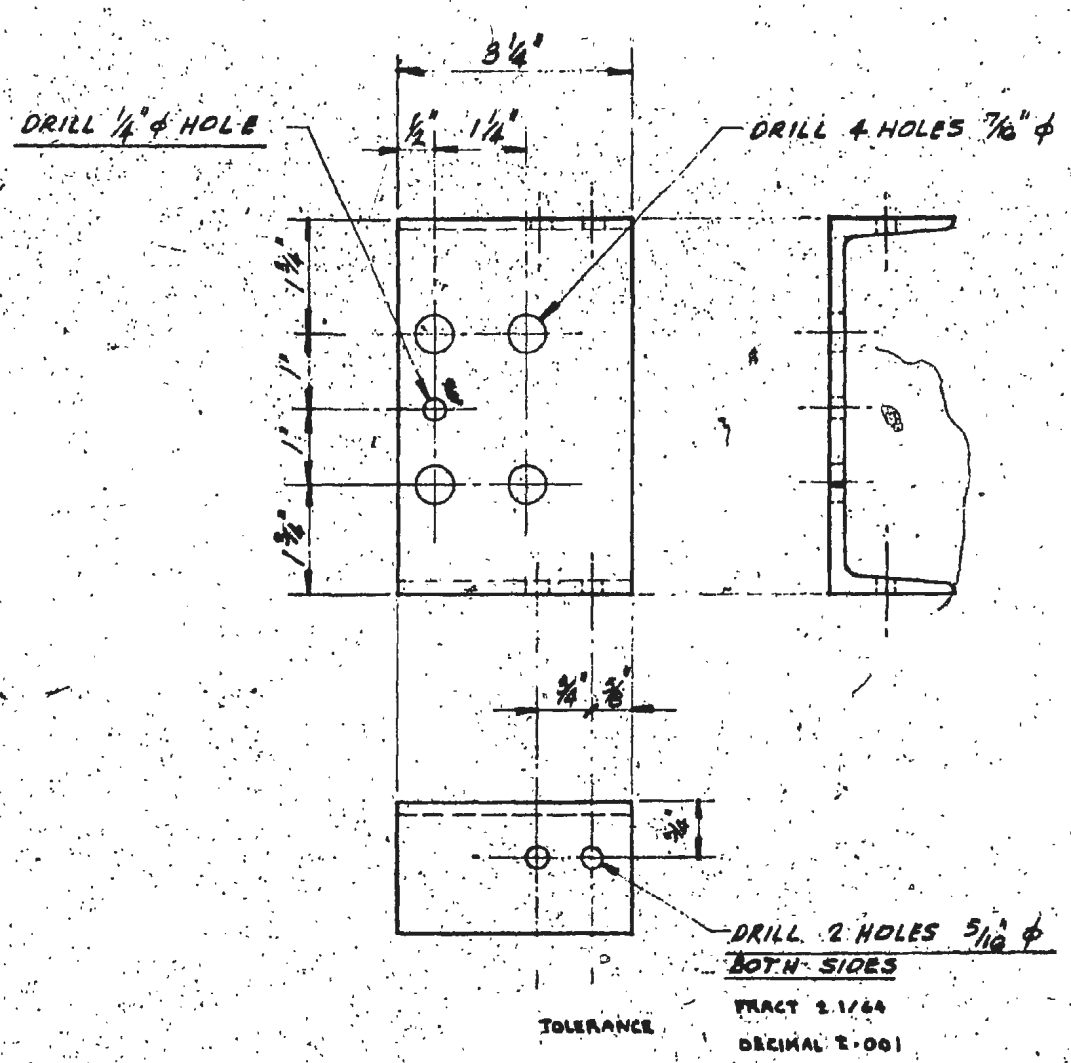

TOLERANCE

FRACT ± 1/64

DECIMAL ± .001

WEAR ATTACHMENTS

WEAR ARM - ITEM-6 NTS

MAT'L - STEEL

ONE REQ'D

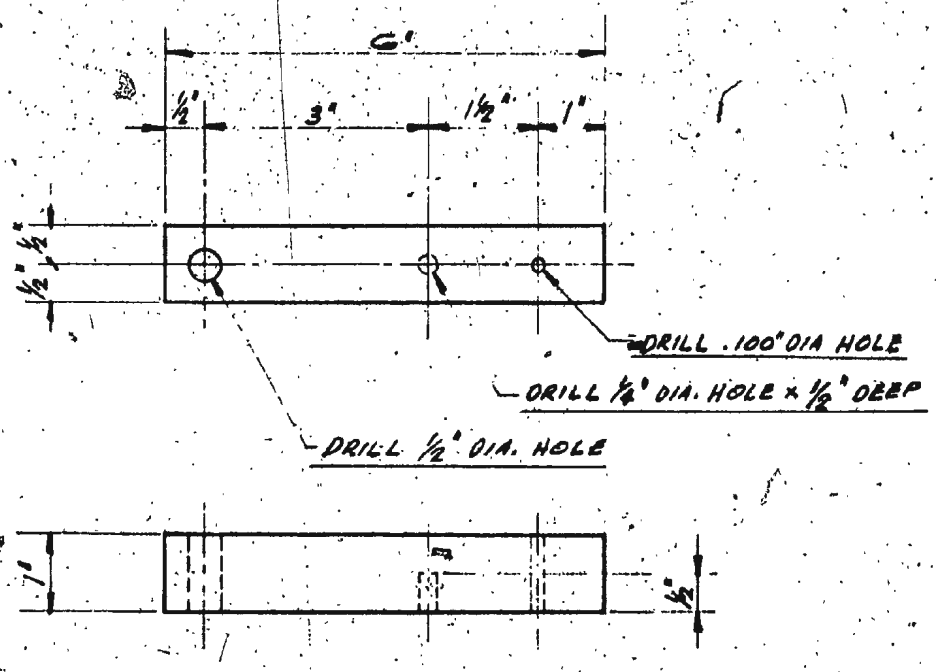

TOLERANCE FRACT ± 1/64

DECIMAL ± .001

WEAK ATTACHMENTS

BRACKET ~ ITEM - 7 NTS

MAT'L - 1/4" ALUMINUM

2 REQ'D

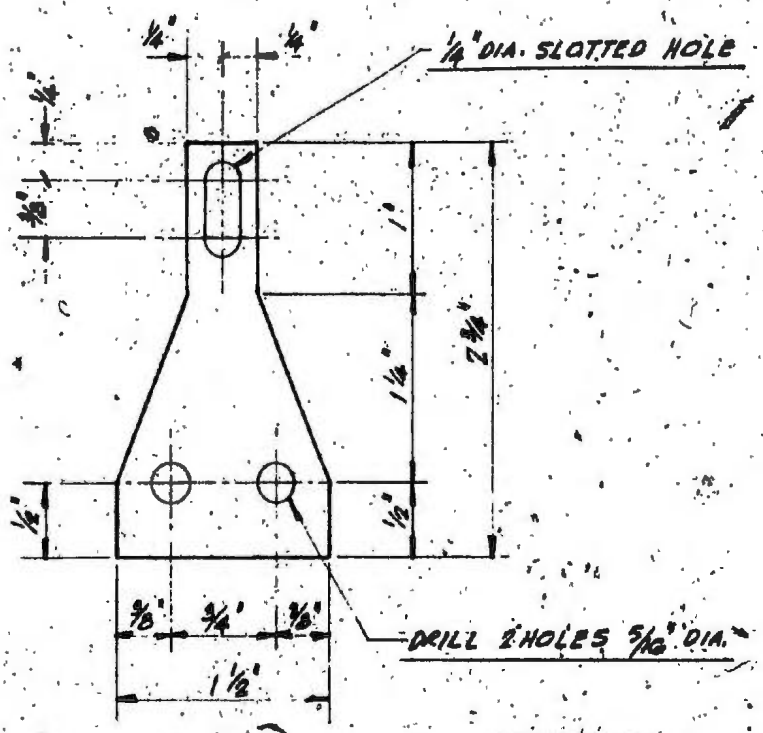

TOLERANCE FRACT ± 1/64

DECIMAL ± .001

WEAR ATTACHMENTS
ARM. PIVOT ASS'Y

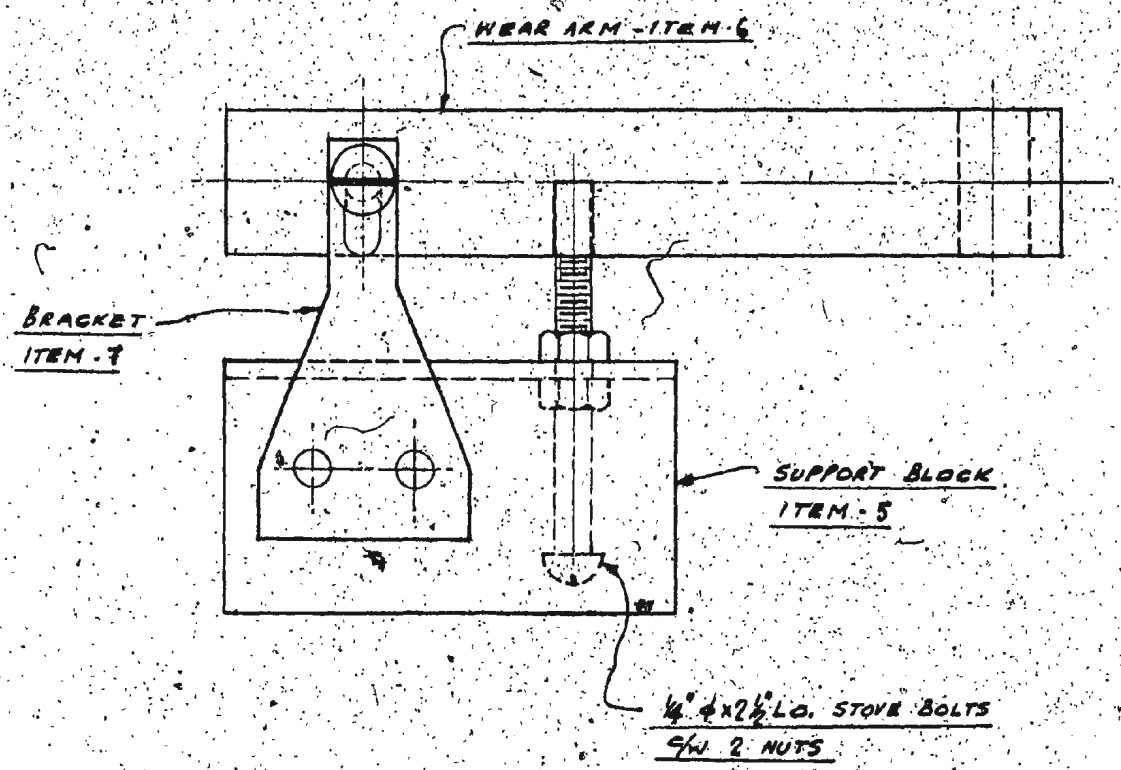

WEAR ATTACHMENTS
WEAR ARM SUPPORT ASS'Y

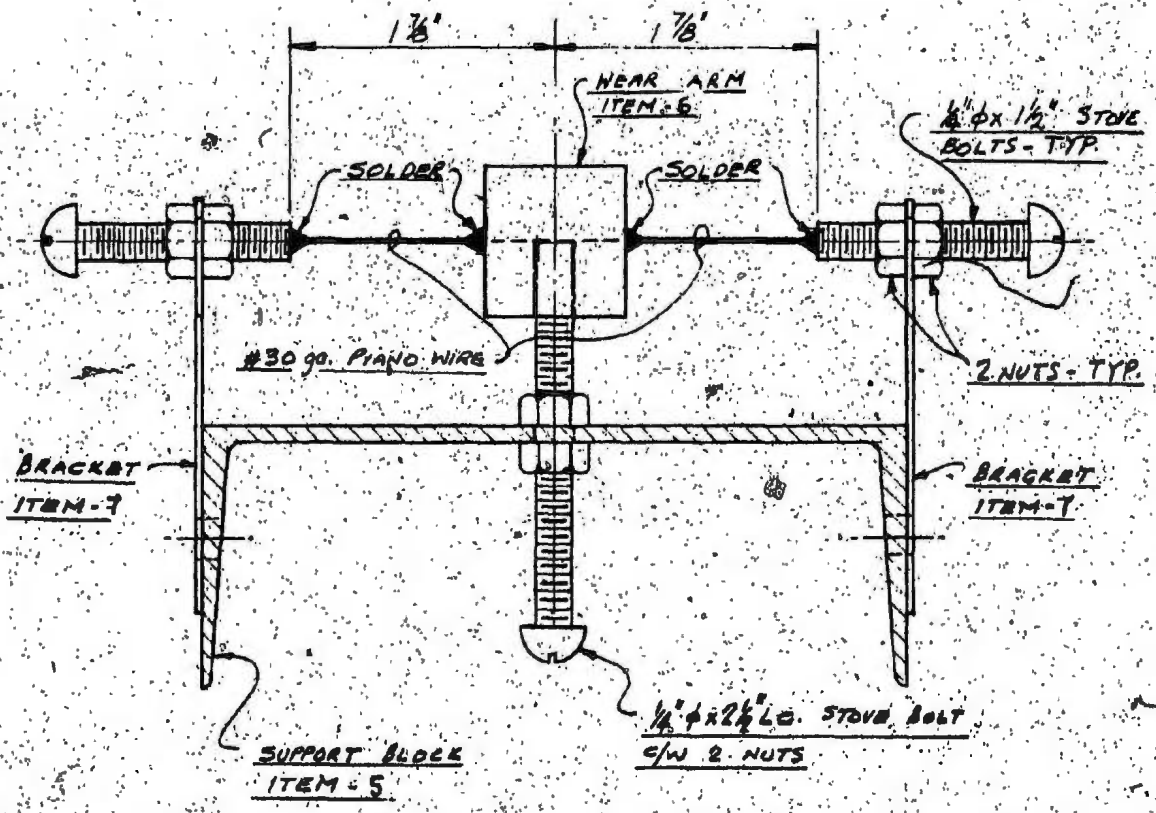

NOTE: DURING ASSEMBLY PIANO WIRE SHOULD BE INSTALLED THROUGH WEAR ARM & THEN STOVE BOLTS SOLDERED TO ENDS. THE PIANO WIRE SHOULD ALSO BE SOLDERED TO WEAR ARM.

WEAR ATTACHMENTS

LOAD FRAME - ITEM-8 NTS

MAT'L - STEEL

ONE REQ'D

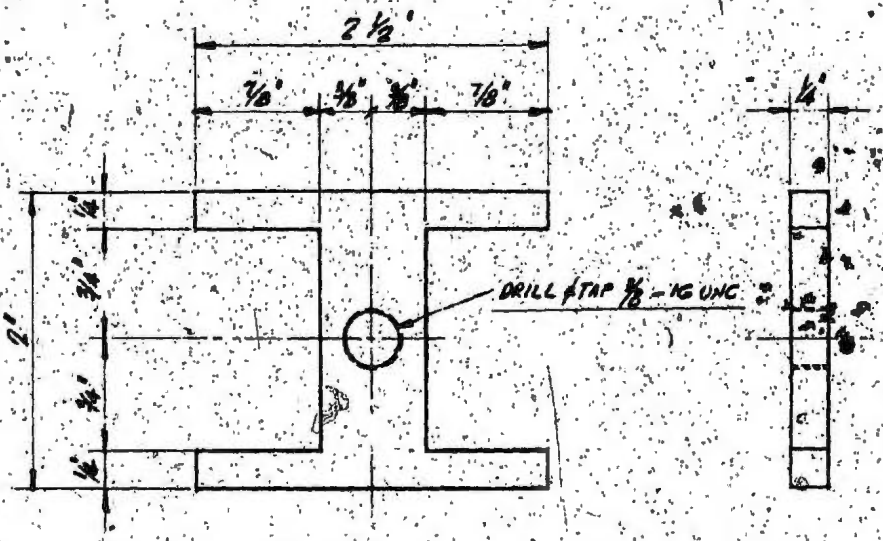

SPECIMEN HOLDER - ITEM-9

MAT'L - BRASS

ONE REQ'D

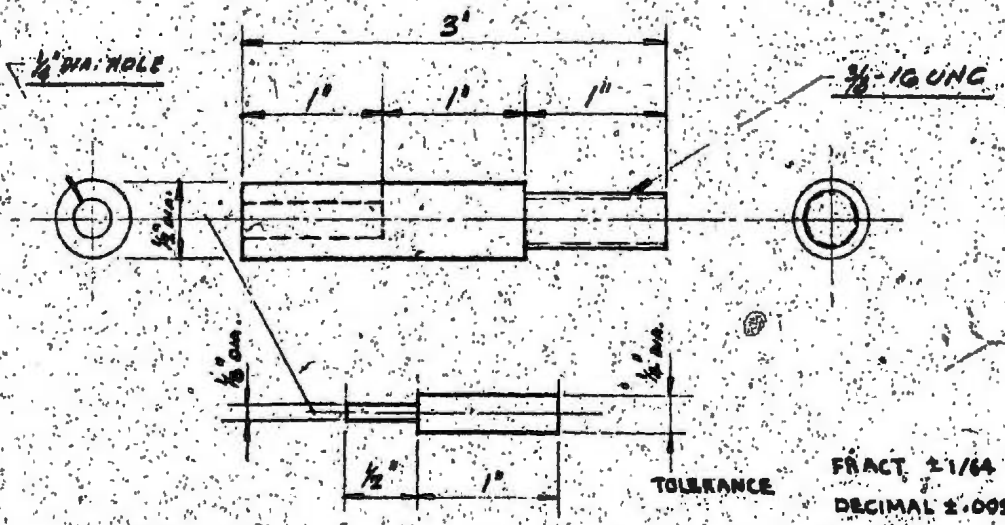

TOLERANCE

FRACT. ±1/64

DECIMAL ±.001

FRETTING ATTACHMENTS

CAM SHAFT ~ ITEM. 1 NTS

MAT'L. ~ STEEL

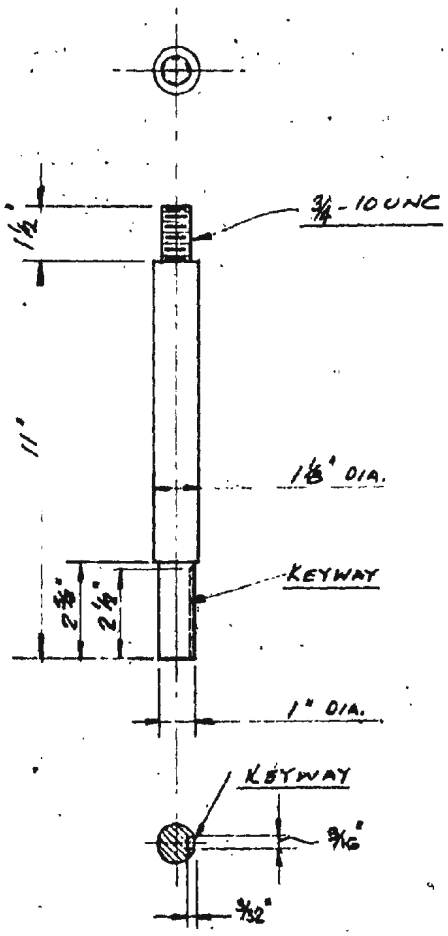

TOLERANCES FOR ALL HOLE & SHAFTS:-

HOLE	+ .0000	
	+ .0005	
SHAFT	- .0008	
	- .0013	

FRETTING ATTACHMENTS

CAM ~ ITEM-2

MAT'L CASE HARDENED STEEL

ONE REQ'D

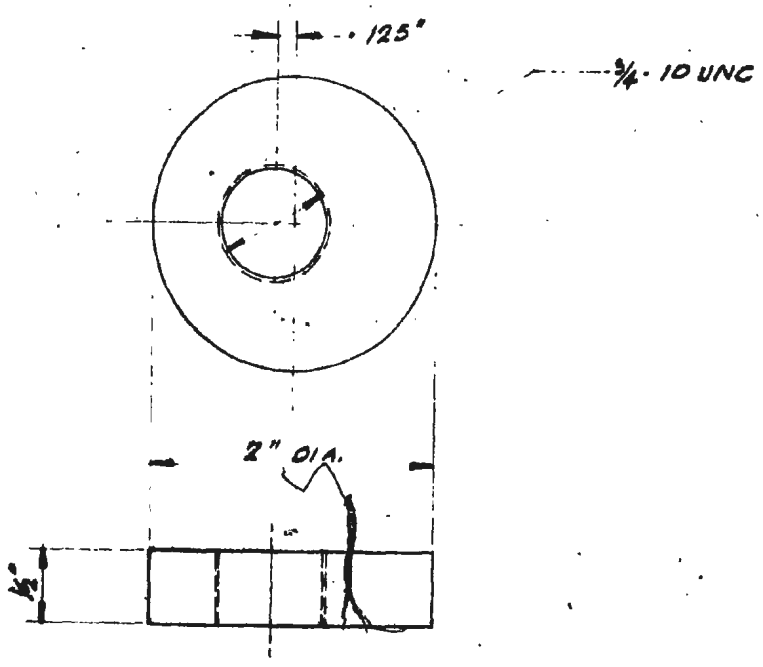

TOLERANCE: FRACTION ± 1/64"
DECIMAL ± 0.008

FRETTING ATTACHMENTS

COLLAR - ITEM 3

MAT'L STEEL

2 REQ'D

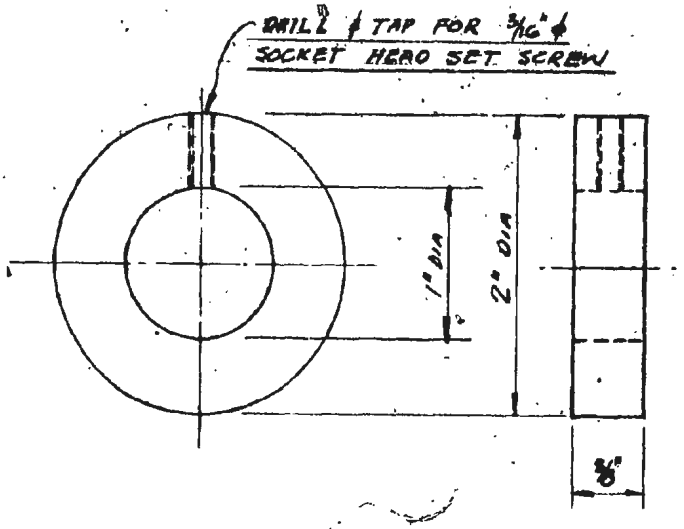

FRETTING ATTACHMENTS

CAM FOLLOWER ITEM 4 NTS

MAT'L ~ HARDENED STEEL

ONE REQ'D

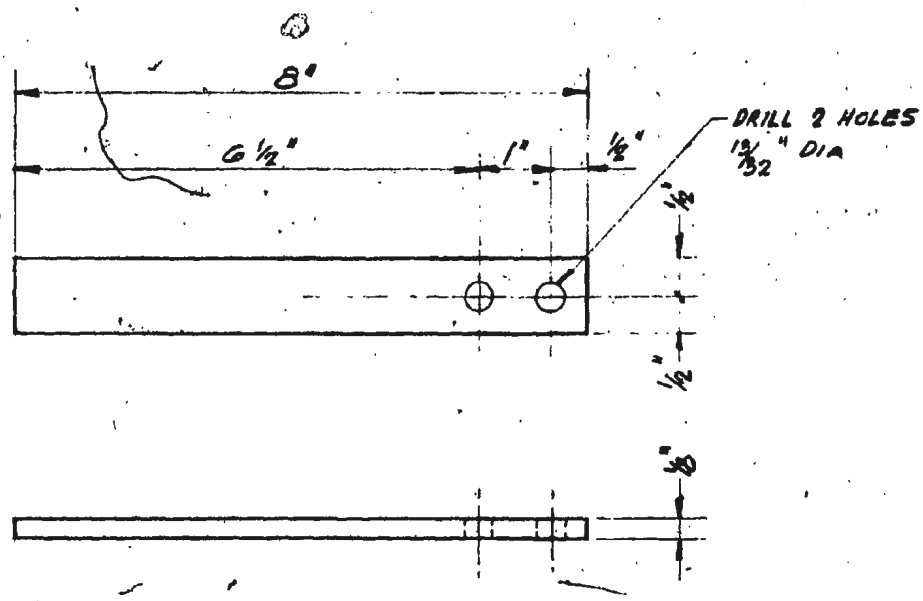

MULTI-PURPOSE TRIBO-DEMONSTRATOR
ASSEMBLED FOR
HYDRODYNAMIC EXPERIMENTS

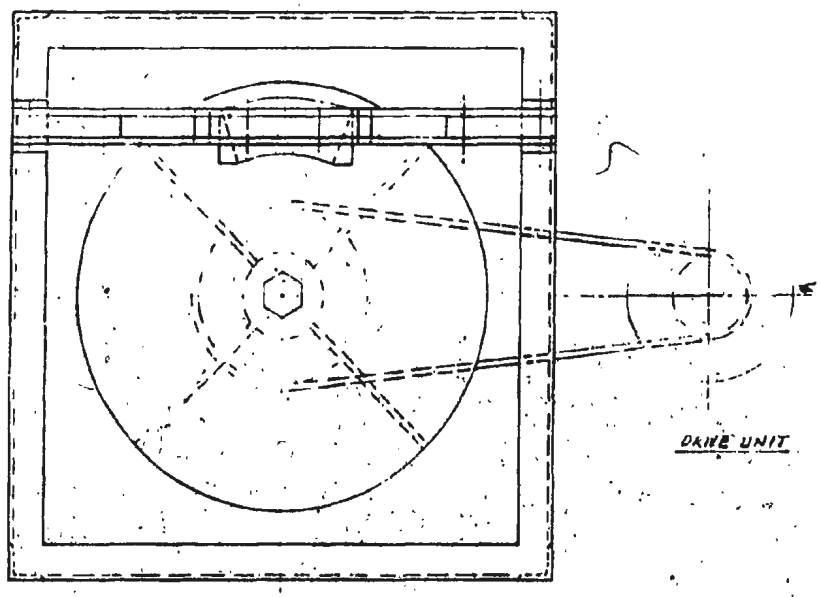

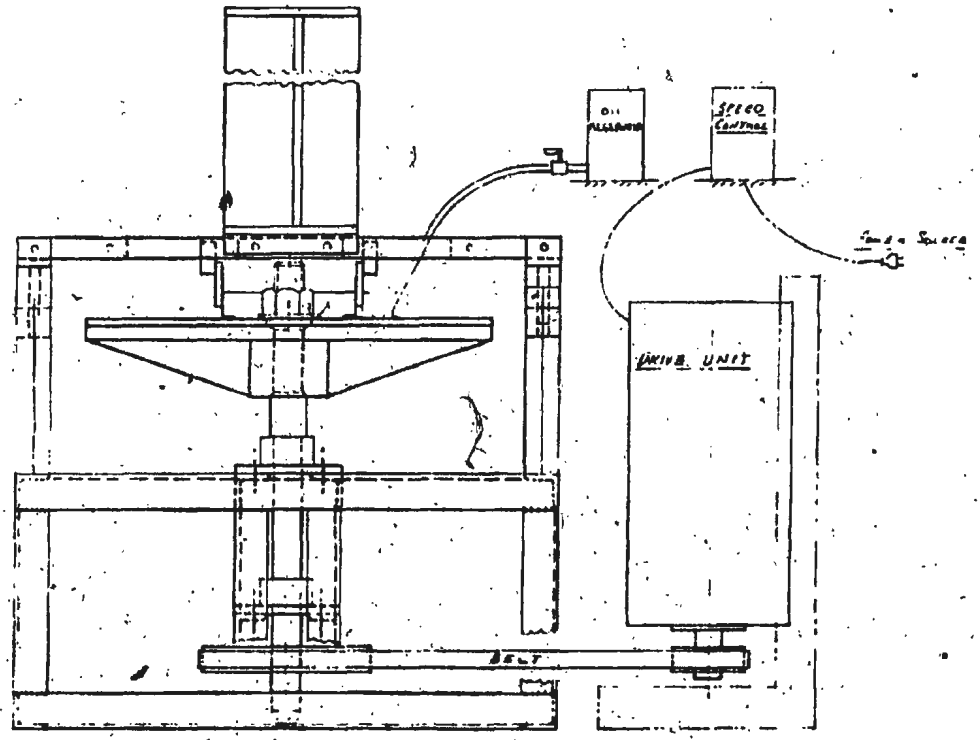

HYDRODYNAMIC ATTACHMENTS
OIL WIPER NTS

SHAPE FROM 8" x 1" x 1/16" AL

GLUE 1/4" x 1/4" SPONGE OR RUBBER STRIP

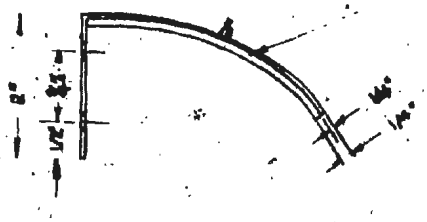

DRILL FOR 3/8" ø BOLT

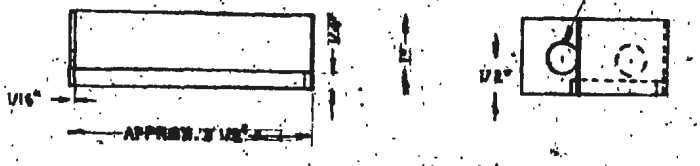

HYDRODYNAMIC ATTACHMENTS
BEARING PAD AND MANOMETER ASSEMBLY

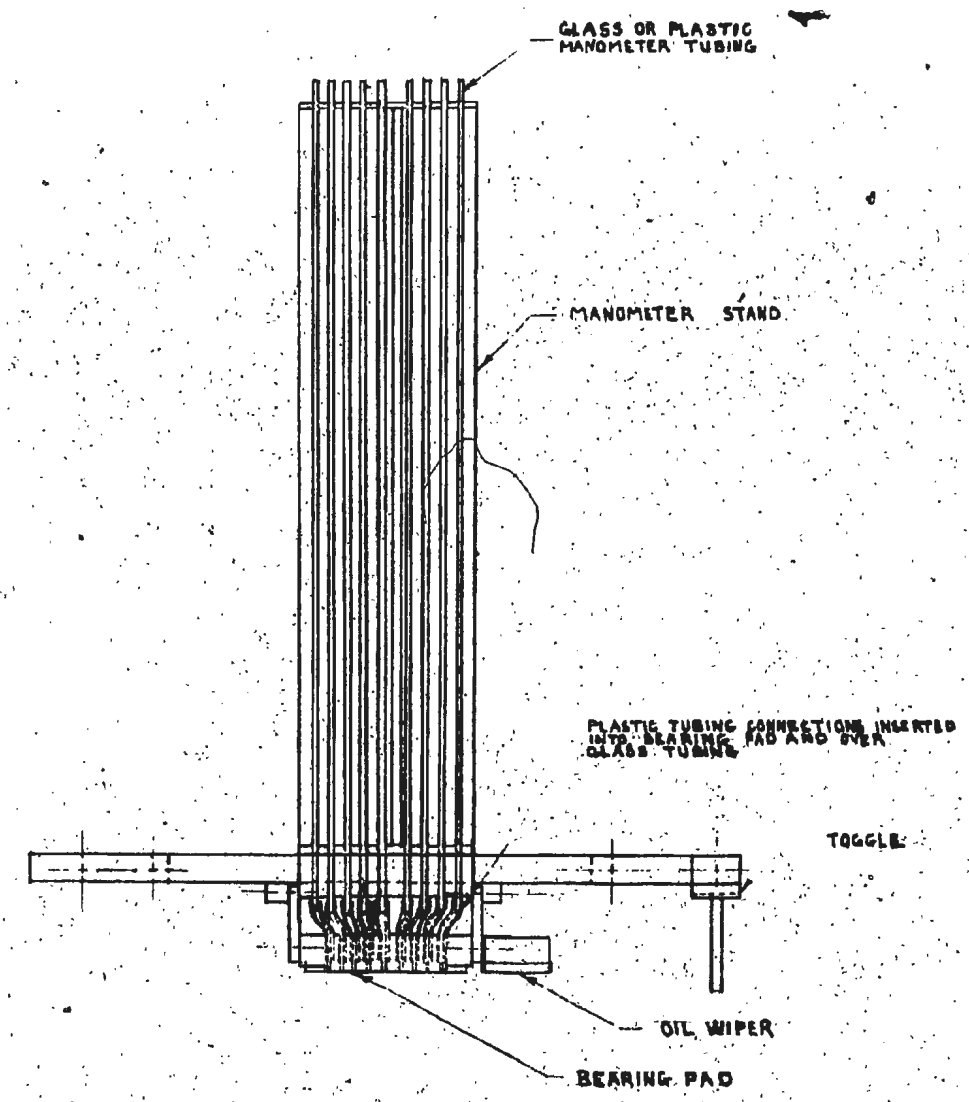

HYDRODYNAMIC ATTACHMENTS
TURNTABLE MECHANISM
PARTS a, b, c, d NTS

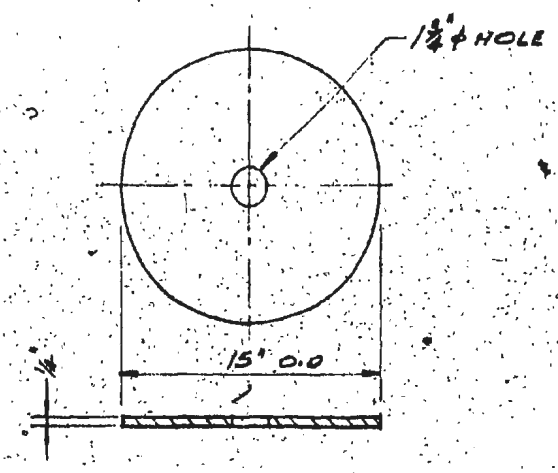

PART - 'a'
MAT'L - ¼" PLATE GLASS
ONE REQ'D

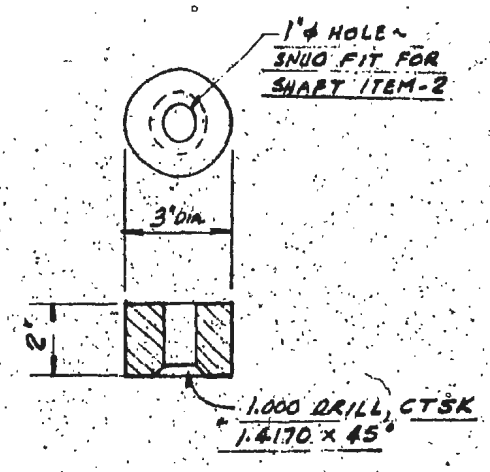

PART - 'd'
MAT'L ~ MILD STEEL
ONE REQ'D

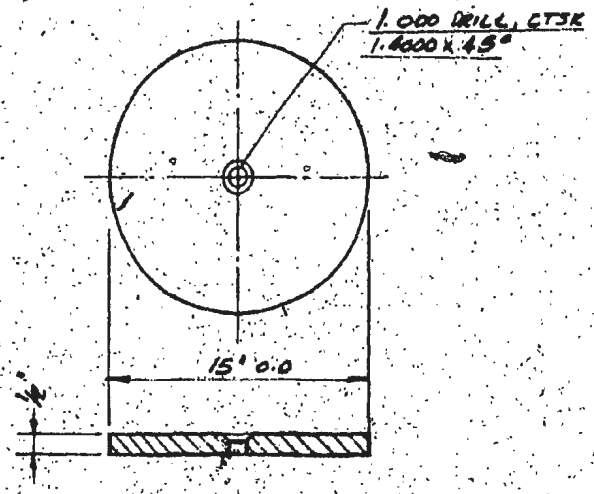

PART - 'b'
MAT'L - ½" MILD STEEL
ONE REQ'D

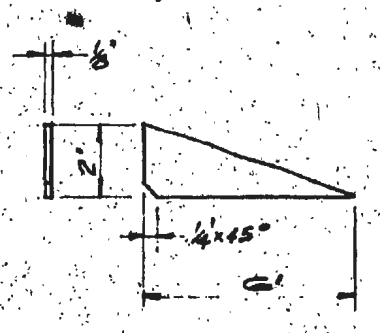

PART - 'c'
MAT'L ~ ⅛" MILD STEEL
4 - REQ'D

HYDRODYNAMIC ATTACHMENTS

TURNTABLE MECHANISM ASS'Y
ITEM - 1

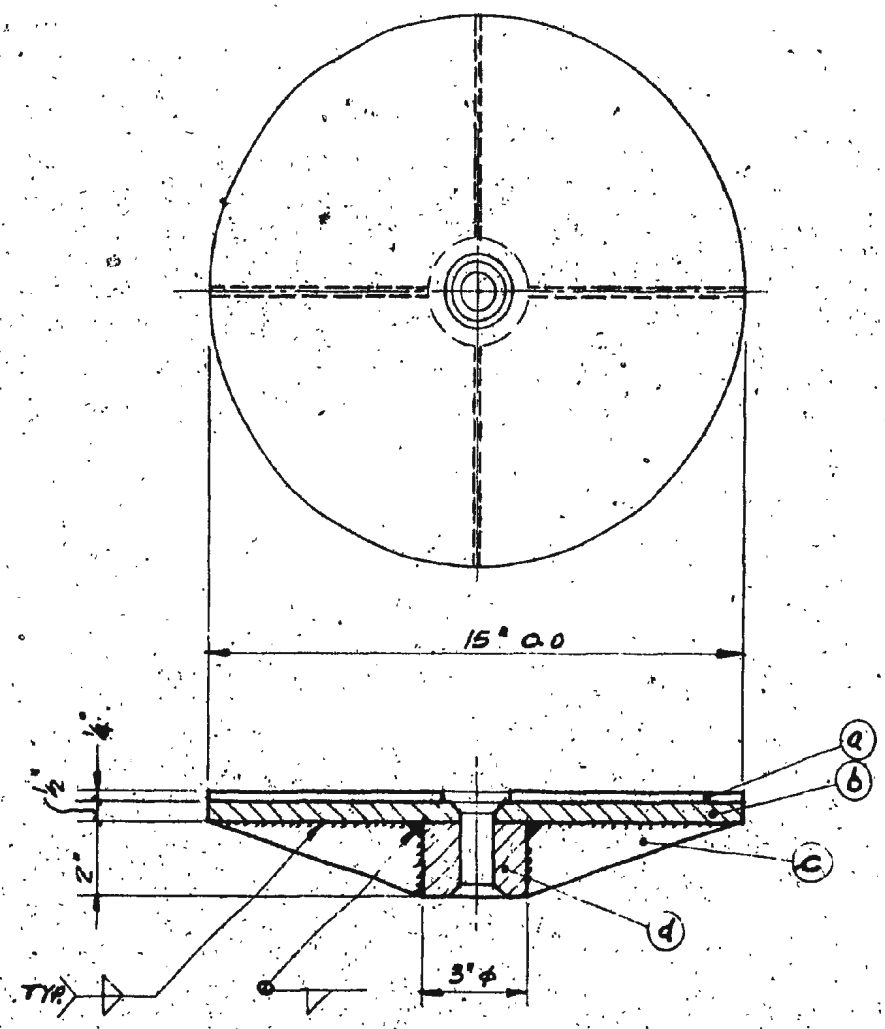

NOTE: ITEM (a) GLUED TO ITEM (b)
REFER TO P.213 FOR PARTS DETAIL

HYDRODYNAMIC ATTACHMENTS

PAD ARM

MAT'L - STEEL ONE REQ'D

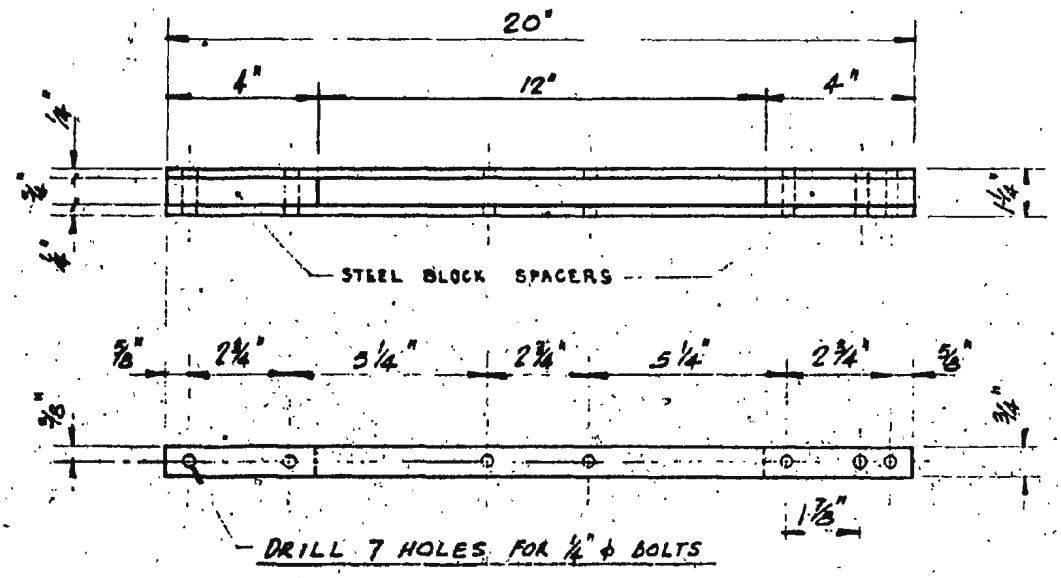

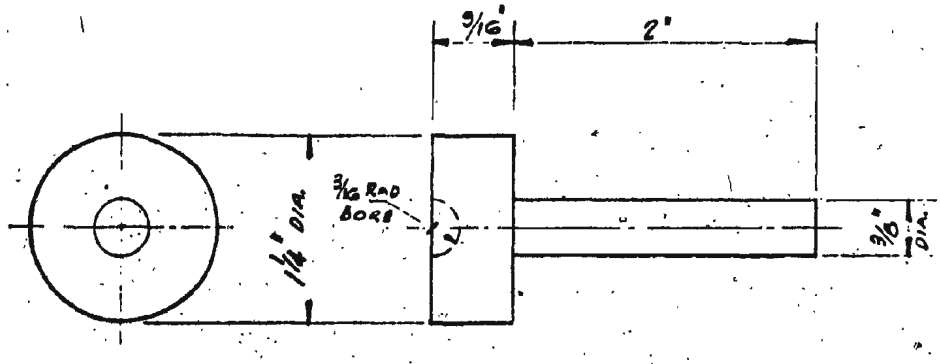

BALL BEARING PLATE

MAT'L - STEEL ~ ONE REQ'D

HYDRODYNAMIC ATTACHMENTS

PAD ARM ASSEMBLY

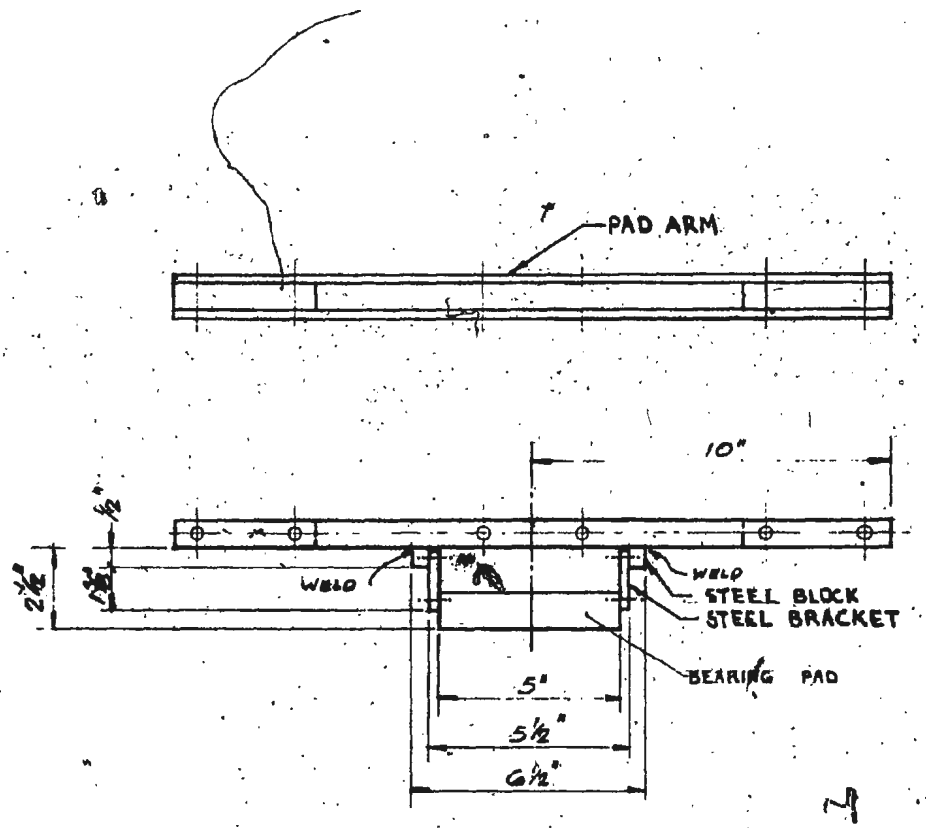

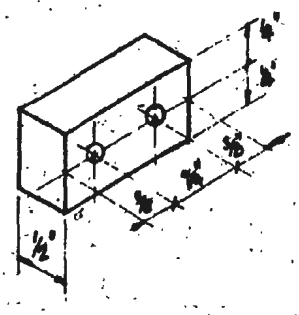

STEEL BLOCK
2 REQ'D
WELD TO PAD ARM

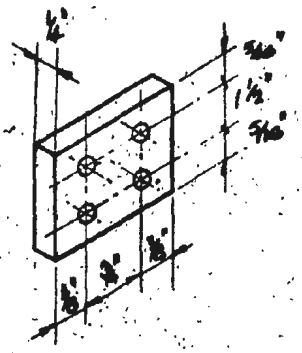

STEEL BRACKET
2 REQ'D
BOLT TO BLOCK & PAD WITH 3/8" ϕ BOLTS

HYDRODYNAMIC ATTACHMENTS

BEARING PAD

MAT'L - STEEL ~ ONE REQ'D

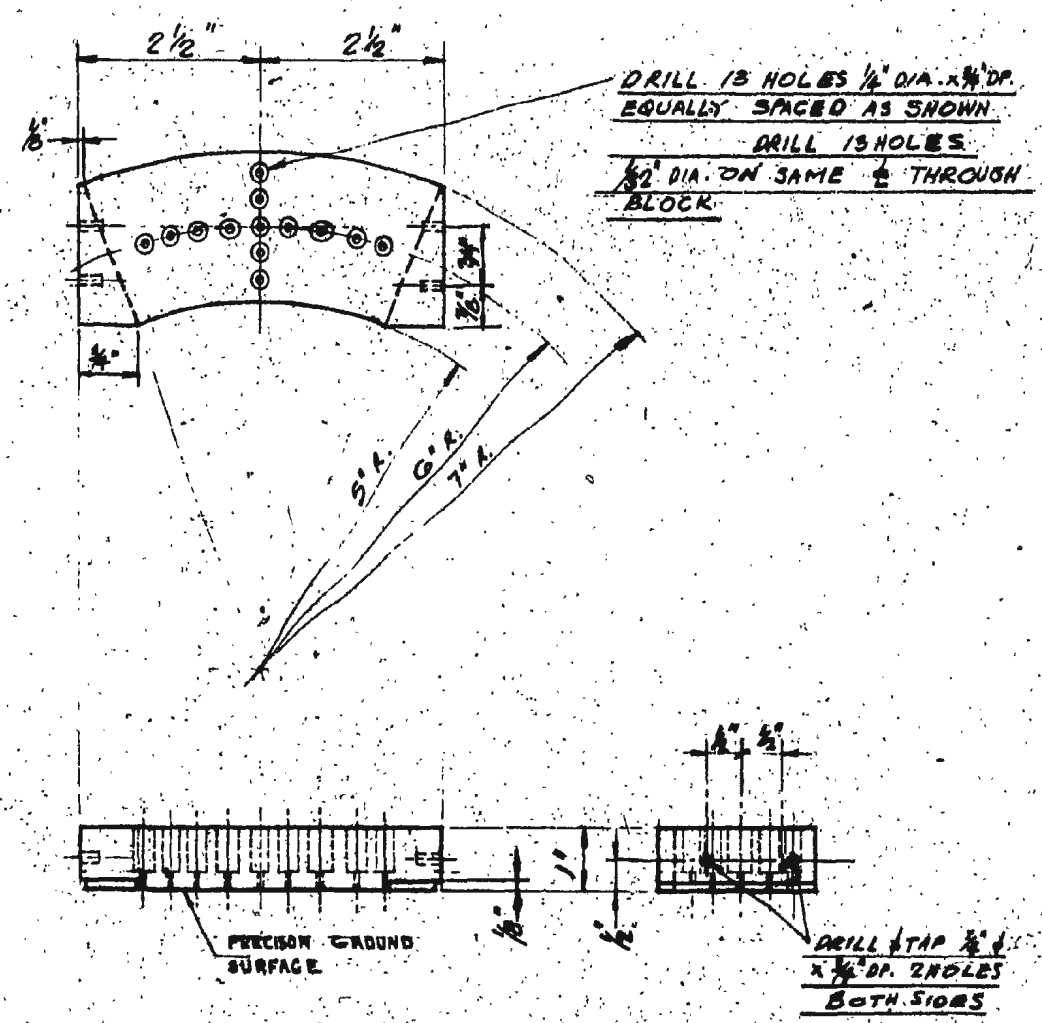

NOTE: MACHINE FROM ONE PIECE OF STOCK

HYDRODYNAMIC ATTACHMENTS

PAD ARM HEIGHT ADJUSTERS

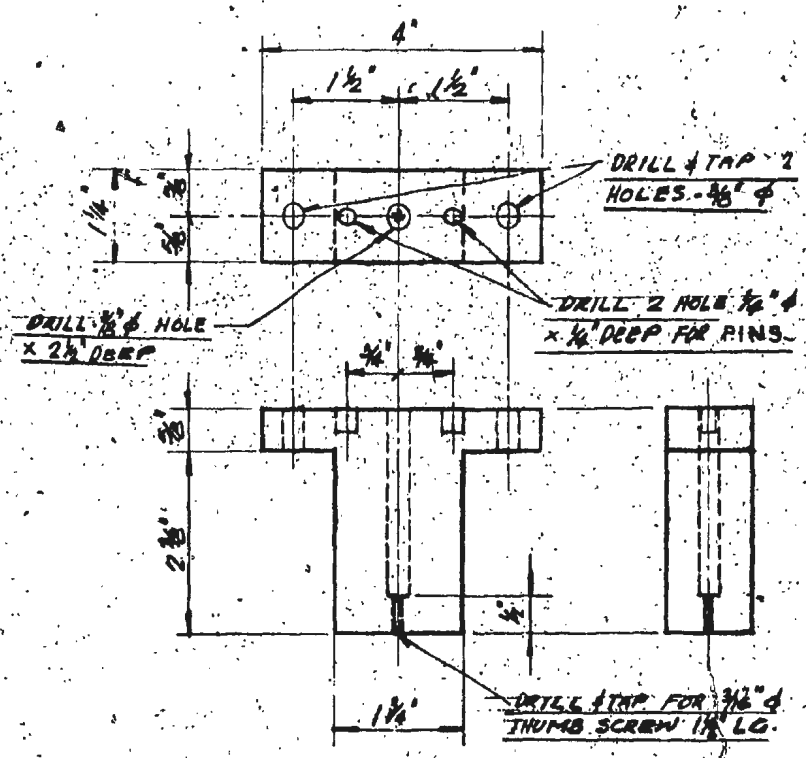

FLANGE
MAT'L - STEEL
2 REQ'D.

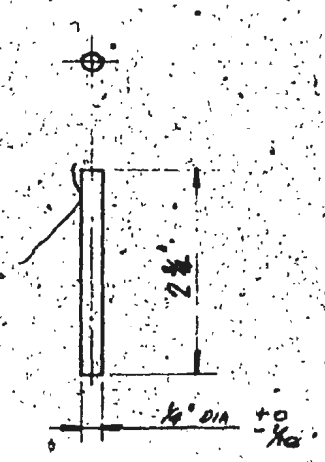

PIN
MAT'L - STEEL
2 REQ'D.

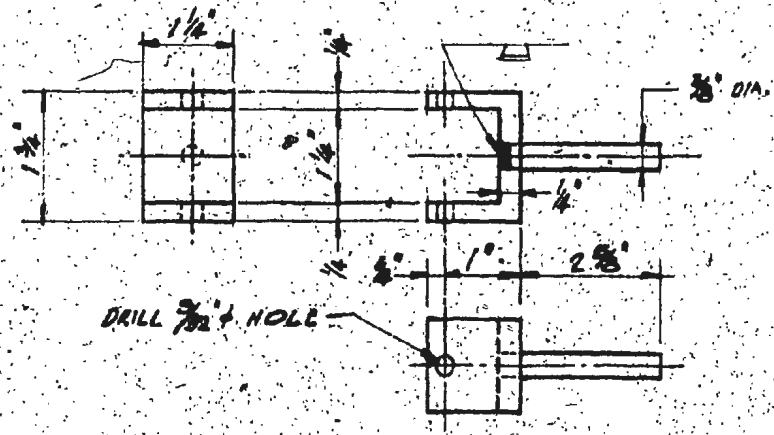

TOGGLE
MAT'L - STEEL ~ ONE REQ'D

HYDRODYNAMIC ATTACHMENTS

MANOMETER STAND

MAT'L ~ 1/4" PLEXIGLASS

ONE REQ'D

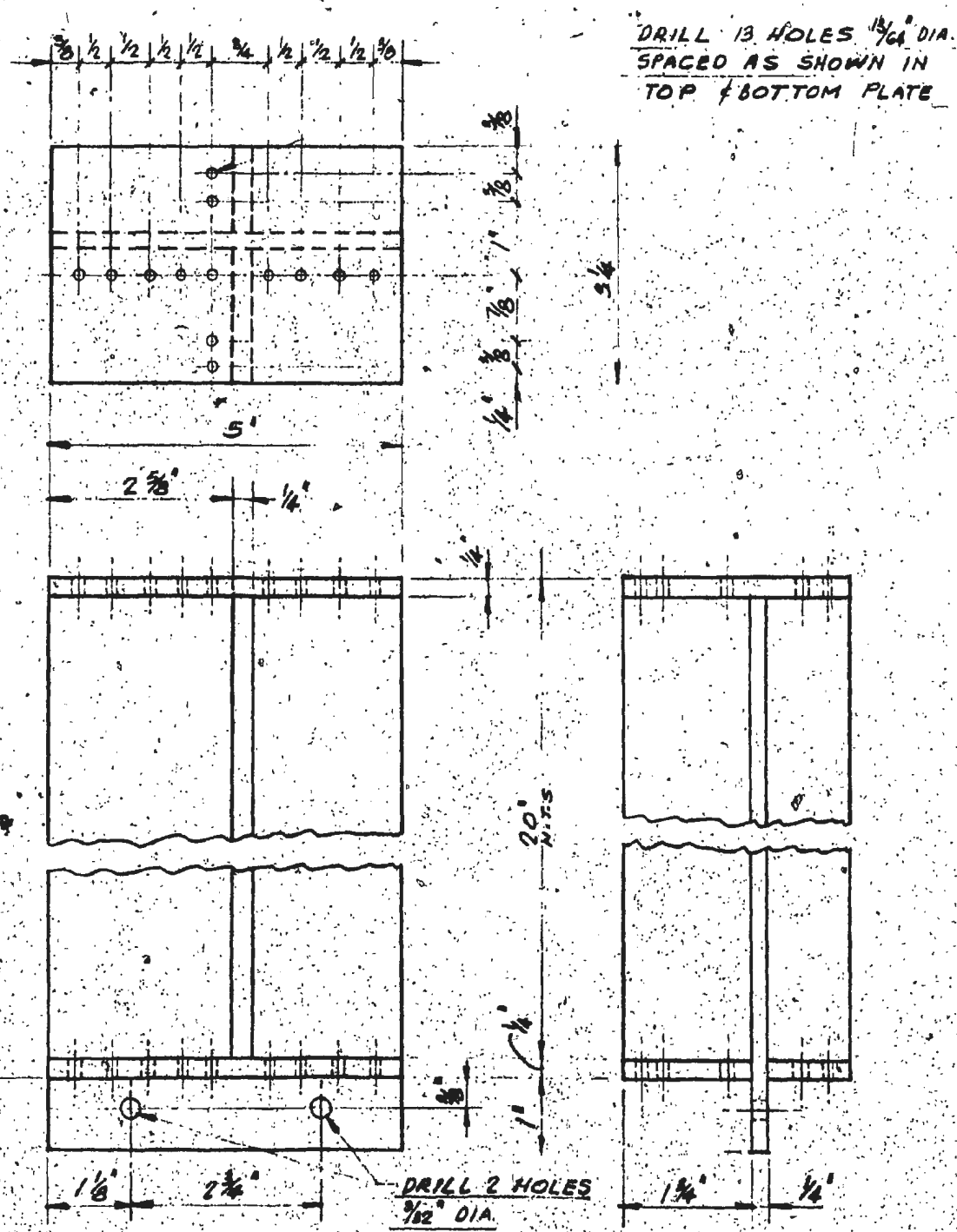

HYDRODYNAMIC ATTACHMENTS

OIL RING NTS

ALL WELDED CONSTRUCTION

MAT'L - 3/32" ALUMINUM

ONE REQ'D

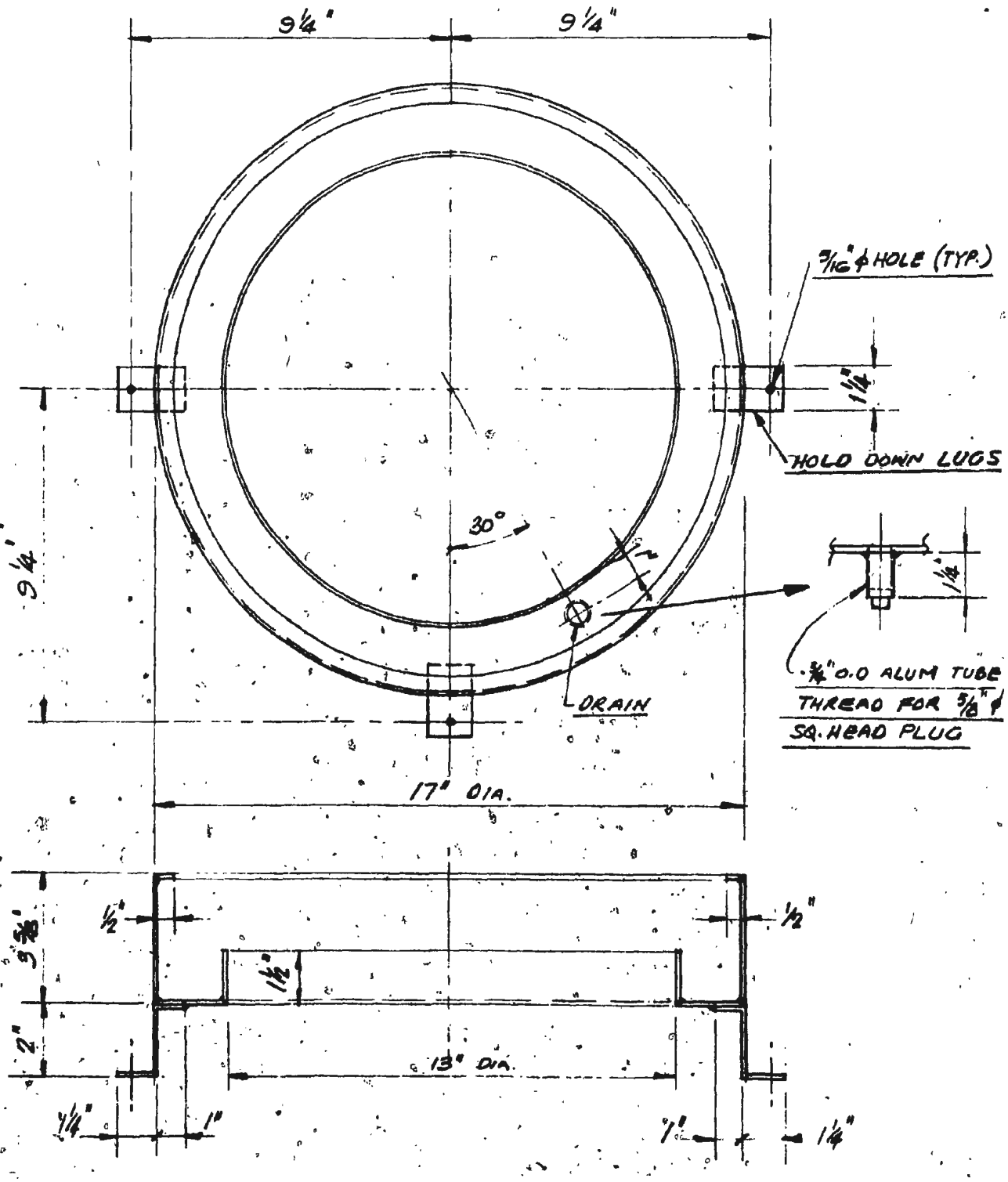

HYDRODYNAMIC ATTACHMENTS

FRAME DETAILS NTS

MAT'L 2 LS 1⅛ x 1⅛ x ⅛" BACK TO BACK ⊥L

ALL WELDED CONSTRUCTION

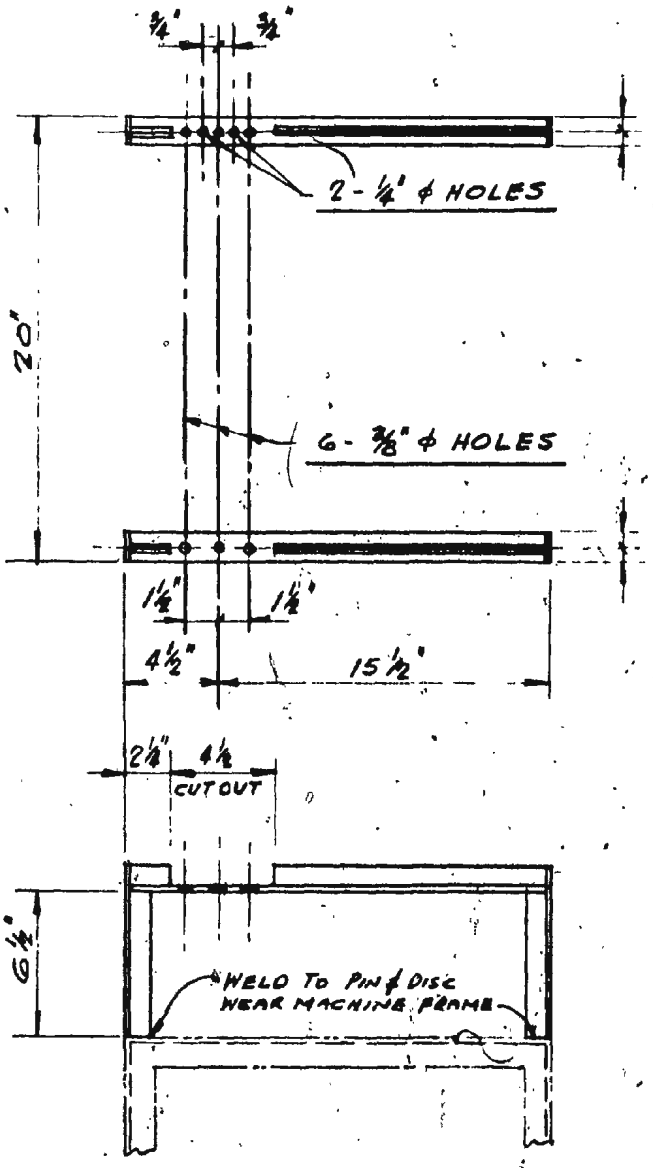

Arrangement - Four-Ball Test Machine

4 BALL TEST MACHINE – ARRANGEMENT
SCHEMATIC ONLY