AN INVESTIGATION OF THE EFFECT OF PRESENTATION OF PICTORIAL ACCOMPANIMENTS WITH MATHEMATICAL WORD PROBLEMS UPON THE ABILITY OF GRADE TEN STUDENTS TO ARRIVE AT A CORRECT SOLUTION TO THE PROBLEM

CENTRE FOR NEWFOUNDLAND STUDIES

TOTAL OF 10 PAGES ONLY
MAY BE XEROXED

(Without Author's Permission)

MARGARET NANCY SPURRELL

CENTRE FOR NFLD. STUDIES
MAY 30 1977
MEMORIAL UNIVERSITY
OF NEWFOUNDLAND

INFORMATION TO USERS

THIS DISSERTATION HAS BEEN MICROFILMED EXACTLY AS RECEIVED

This copy was produced from a microfiche copy of the original document. The quality of the copy is heavily dependent upon the quality of the original thesis submitted for microfilming. Every effort has been made to ensure the highest quality of reproduction possible.

PLEASE NOTE: Some pages may have indistinct print. Filmed as received.

Canadian Theses Division
Cataloguing Branch
National Library of Canada
Ottawa, Canada K1A 0N4

AVIS AUX USAGERS

LA THESE A ETE MICROFILMEE TELLE QUE NOUS L'AVONS RECUE

Cette copie a été faite à partir d'une microfiche du document original. La qualité de la copie dépend grandement de la qualité de la thèse soumise pour le microfimage. Nous avons tout fait pour assurer une qualité supérieure de reproduction.

NOTA BENE: La qualité d'impression de certaines pages peut laisser à désirer. Microfilmée telle que nous l'avons reçue.

Division des thèses canadiennes
Direction du catalogage
Bibliothèque nationale du Canada
Ottawa, Canada K1A 0N4

AN INVESTIGATION OF THE EFFECT OF PRESENTATION OF PICTORIAL ACCOMPANIMENTS WITH MATHEMATICAL WORD PROBLEMS UPON THE ABILITY OF GRADE TEN STUDENTS TO ARRIVE AT A CORRECT SOLUTION TO THE PROBLEM

by

Margaret Nancy Spurrell, B.A.(Ed.), B.A.

A Thesis submitted in partial fulfillment
of the requirements for the degree of
Master of Education

Department of Curriculum and Instruction
Memorial University of Newfoundland

August 1975

St. John's Newfoundland

ABSTRACT

Purpose

The purpose of the present study was to compare the results of mathematics word problems solved by tenth-grade students when these problems were presented in three different forms: in word form only or as Type-A questions, in word form accompanied by an accurate pictorial representation of the problem or as Type-B questions, and in word form accompanied by an inaccurate pictorial representation of the problem or as Type-C questions.

Sample

The sample consisted of 90 "good", 98 "average" and 92 "poor" tenth-grade students. These 280 students were selected from ten schools chosen at random from the geographic region east of Grand Falls, Newfoundland (inclusive) and south of Carmanville, Newfoundland (inclusive). Each of these 280 students was selected on the basis of agreement by at least two of his mathematics teachers that the student satisfied the study definition of a "good", "average", or "poor" problem solver.

Hypotheses tested

The nine hypotheses tested in this study can be grouped into three. They are:

1. "Good", "average" and "poor" problem solvers score significantly higher on problems given as Type-B questions than they do on these same problems given as Type-A questions.

2. "Good", "average" and "poor" problem solvers score significantly higher on problems given as Type-B questions than they do on these same problems given as Type-C questions.

3. "Good", "average" and "poor" problem solvers score significantly higher on problems given as Type-A questions than they do on these same problems given as Type-C questions.

Method and procedures

Three alternate tests, Tests I, II and III were developed for the study. Each test contained the same 21 items. Seven of these 21 test items were Type-A questions, seven were Type-B questions and seven were Type-C questions. The seven Type-A questions on Test I appeared as Type-B questions on Test II and as Type-C questions on Test III. All tests were administered by the investigator. Each participating student was given one 2-hour afternoon session within which to complete the test he received.

The hypotheses of the study were tested by using three one-way analyses of variance followed in each case by a Scheffé test of multiple comparisons. The scores from the

Type-A, Type-B and Type-C questions were used to test the hypotheses. The .05 level of confidence was set for all hypothesis testing.

The reliability of the testing instrument was found by using the scores from the study. The split-half procedure was followed and the adjusted Pearson-Product Moment Correlation Coefficients were found to be .83 for Test I, .77 for Test II and .83 for Test III.

Results and conclusions

The analysis of the data resulted in the acceptance of hypotheses I and II and the rejection of hypothesis III.

These results seem to indicate that tenth-grade students do find the accompaniment of accurate pictorial representations with mathematics word problems helpful in solving these problems. The results failed to support the opinion that the accompaniment of inaccurate pictorial representations with mathematics word problems will misdirect the student and result in significantly lower scores than if no pictorial accompaniment were present.

ACKNOWLEDGEMENTS

The successful completion of the present study depended upon the co-operation and good-will of the principals, mathematics teachers and students of the following schools: Bonavista Regional Senior High, Brother Rice Regional High, E. Vaters Pentecostal Academy, Fogo Regional High, Gander Collegiate, Glovertown Regional High, Horwood Regional High, Lewisporte Central High, Prince of Wales Regional High, Queen Elizabeth Regional High, and St. Augustine Central High. The investigator wishes to express her sincere appreciation to all of these people.

The investigator also wishes to thank Dr. G. K. Wooldridge, Dr. R.D. Connelly, Dr. J. Sherrill and Mr. J. Stapleton for their assistance in the study.

TABLE OF CONTENTS

		Page
ACKNOWLEDGEMENTS		ii
LIST OF TABLES		vi
CHAPTER I.	INTRODUCTION	1
	Origin of the study	4
	Rationale for the study	5
	Purpose of the study	9
	Hypotheses of the study	9
	Plan of the study	11
CHAPTER II.	REVIEW OF RELATED LITERATURE AND RESEARCH	14
	Literature related to the study	14
	Summary and implications of literature related to the study	20
	Research findings related to the study	21
	Summary and implications of research findings related to the study	30
CHAPTER III.	METHOD AND PROCEDURES	33
	Development of the testing instrument	33
	Definition of terms	42
	The pilot study	45
	Results of the pilot study	46

		Page
CHAPTER III.	(cont'd)	
	Selection of schools for sample	50
	Selection of students for sample	51
	Collection of the data	53
	Analysis of the data	53
	Limitations of the study	54
	Summary	56
CHAPTER IV.	ANALYSIS OF DATA	58
	Findings related to study assumptions	58
	Hypotheses testing	64
	Testing null hypotheses I, II and III	66
	Testing null hypotheses IV, V and VI	69
	Testing null hypotheses VII, VIII and IX	71
	Additional findings	73
CHAPTER V.	SUMMARY, RESULTS, CONCLUSIONS AND RECOMMENDATIONS FOR FURTHER STUDY	76
	Summary	76
	Results of data analysis	79
	Conclusions	84
	Recommendations for further study	85
REFERENCES		87
APPENDICES		
	A. Test I	91
	B. Test II	113
	C. Test III	135

Page

APPENDICES (cont'd)

D. Correct responses to test items 157

E. Correspondence 159

F. Instructions read to students 166

LIST OF TABLES

		Page
TABLE 1.	Reliability coefficients of Sherrill's testing instrument	35
TABLE 2.	Summary description of tests	39
TABLE 3.	Detailed description of tests	40
TABLE 4.	Tests items grouped on basis of difficulty	41
TABLE 5.	Pilot study percentages of correct responses per test item	47
TABLE 6.	Pilot study percentage of correct responses per test item classified by item type	48
TABLE 7.	Reliability of tests calculated from pilot study scores	49
TABLE 8.	Percentage of correct responses per test item for good, average and poor problem solvers	59
TABLE 9.	Percentage of correct responses per test item as Type-A question for good, average and poor problem solvers	60
TABLE 10.	Percentage of correct responses per test item as Type-B question for good, average and poor problem solvers	61
TABLE 11.	Percentage of correct responses per test item as Type-C question for good, average and poor problem solvers	62
TABLE 12.	Mean and standard deviation of Test I, Test II and Test III	63
TABLE 13.	Analysis of variance of scores of Tests I, II and III	64

Page

TABLE 14. Mean and standard deviation of A-, B- and C-scores for "good" problem solvers. 67

TABLE 15. Analysis of variance of A-, B- and C-scores for "good" problem solvers 67

TABLE 16. Multiple comparisons of A-, B- and C-scores for "good" problem solvers by the Scheffé method 68

TABLE 17. Mean and standard deviation of A-, B- and C-scores for "average" problem solvers 69

TABLE 18. Analysis of variance of A-, B- and C-scores for "average" problem solvers 70

TABLE 19. Multiple comparisons of A-, B- and C-scores for "average" problem solvers by the Scheffé method 70

TABLE 20. Mean and standard deviation of A-, B- and C-scores for "poor" problem solvers 71

TABLE 21. Analysis of variance of A-, B- and C-scores for "poor" problem solvers 72

TABLE 22. Multiple comparisons of A-, B- and C-scores for "poor" problem solvers by the Scheffé method 73

TABLE 23. Reliability of tests calculated from study scores 74

CHAPTER I

INTRODUCTION

Problem solving is irrelevant only to those who live in a constant society where all occurrences are predictable and have pre-determined solutions. Such a society has never been the society of man. The history of man has been the creation of problems followed by the pursuit of solutions. Schools exist to help young people learn how to survive and participate in a constantly changing society. Schools, then, must accept the teaching of problem solving as one of their main functions. The importance of this function is stressed in the following statement by the Educational Policies Commission (1961):

> The purpose which runs through and strengthens all other educational purposes---the common thread of education---is the development of the ability to think.... Many agencies contribute to the achievement of educational objectives, but this particular objective will not be generally attained unless the school focuses on it. In this context, therefore, the development of every student's rational powers must be recognized as centrally important (p. 12).

Schools of our present society are being called upon with increasing urgency to provide programs of instruction that will develop in students the ability to solve problems. This demand is voiced in the statement made by De Zafra (1966):

> For the first time in his long history, mankind has in his power the ability to fill his cornucopia or to destroy himself. Because the rate of change has greatly accelerated and because the applications that are made of mankind's discoveries and inventions are more important than are the discoveries and inventions themselves, mankind now needs to do some critical thinking of an unprecedented quality. The future of the human race depends upon the quality of critical thinking that is done in the world today (p. 231).

A similar demand comes from Hildenbrandt (1959):

> The greatest need in our present day scientific age is for men and women who can use their minds as well as their knowledge of mathematics; for men and women who can use their understanding of the uses that have already been made of mathematics and apply it to new and unsolved problems .... To apply and to invent mathematics one must develop proficiency in problem solving or creative thinking (p. 370).

Mathematics has traditionally been held responsible for developing problem solving ability in students. Today, it is generally recognized that this responsibility must be shared by all school disciplines. Mathematics educators, however, believe that mathematics is the discipline best suited to developing problem solving ability. Fugii (1963) makes this claim:

> Mathematics as a language and reasoning tool is particularly well-suited for use in problem solving. It is a disciplined and exact process, concise and precise, with rules which, unlike the rules in most languages, are almost without exception. When a chain of reasoning is carried out mathematically, the reasoning can be sure and swift (p. 166).

Although mathematics educators of the 1970's have given verbal commitment to the responsibility to develop in their students the ability to solve problems, it is feared that too little real effort is being made to help students become better problem solvers. Fitzgerald (1975) makes the following statement:

> Most of the mathematics teaching occuring today in schools in the United States continues to be mechanistic, skill-oriented and motivated principally by the supposed need for those skills in the next mathematics class (p. 40).

The appalling condition described in this statement exists far beyond the boundaries of the United States.

Pupils can become better problem solvers only if mathematics teachers first seek to discover those factors that contribute to knowledge and understanding of mathematics and the problem solving process and then act to implement this knowledge into their teaching. This is the responsibility of all mathematics educators of the 1970's.

Many studies have attempted to identify those factors and teaching methods that facilitate the solving of mathematics word problems. However, most of these studies have failed to reveal statistically significant findings, and in some instances the different findings have not been in agreement. It is safe to say that all past studies share one common conclusion: they demand further verification or contradiction.

Origin of the study

The problem of how students can be helped to become better problem solvers has always existed for teachers. For the investigator the problem had its beginning eight years ago and has continued to exist since that time. During those eight years the investigator has worked with young people in Newfoundland in grades eight, nine and ten in an attempt to help them use mathematics to learn. Many suggestions have been given in attempting to help students solve problems. These suggestions were given with the hope that each of the hundreds of different students might find some of them helpful to him. The suggestion to draw a picture to help explain a problem is received with some popularity. However, popularity is not necessarily a claim to worthiness. The question remains. Does the accompaniment of a picture with a word problem assist the student in solving the problem or will the presence of a picture cause the student to neglect the actual problem and to rely upon the pictorial version of the problem even when that pictorial version is an inaccurate representation of the problem? Eight years of pupil-teacher classroom interaction suggests that both parts of the question may be answered in the affirmative. Much supportive literature exists but research findings are not conclusive.

Rationale for the study

What can the teacher do to help students solve mathematics word problems? This question has existed for as long as there have been teachers, pupils and mathematics word problems. O'Brien (1956) asks this question when he writes:

> The climax of problem-solving is that stage in the process when all the pieces fall into place. What can the teacher do to help reach this climax (p. 79)?

The present study was based upon the beliefs that the success of a student in solving mathematics word problems depends in part upon his knowledge and understanding of the problem; that many secondary students have not reached the level of abstract thinking sometimes attributed to them; and that the accompaniment of an accurate pictorial version of a word problem with the problem will contribute to the student's knowledge and understanding of the problem by providing a link between the abstract and the concrete. These beliefs are shared by many leading educators. Spitzer (1970) makes the following statement concerning the need for understanding in learning:

> In the more than forty years since new emphasis began to be put on mathematics meanings, a number of experimental studies have shown that a meaningful approach to learning is superior to approaches that either ignore meaning completely or at least do not

> emphasize meaningful aspects. The observational reports of competent observers have been far more valuable than the findings of experimental studies in showing the importance of meaning learning. There is a definite belief on the part of those who have observed pupil study that, where meanings and understanding are emphasized, such learning is superior to that found where no such emphasis exists. Also, mathematicians and other specialists who have made a critical analysis of mathematics instruction in the post-Sputnik era have concluded unanimously that understanding is essential to good instruction (p. 7-8).

It has also been suggested that educators sometimes assume secondary school students are capable of abstract logical reasoning when this is not true. It follows, therefore, that teaching aids based upon such an assumption do not really aid the student in developing his problem solving skills. Concerning this, Hazlitt (1930) suggests that Piaget has an "exaggerated view of the logicality of adult thought (p. 361)." Brownell (1951) agrees with Hazlitt on this point. He states that "the highly logical reasoning which Piaget makes typical of adults is really uncommon (p. 431)." Underhill (1972) expresses his concern in the following manner:

> The abstract form is symbol manipulation and presupposes some sophistication in abstract number concepts which were hopefully gleaned from concrete experiences. The child who cannot do it has not made the transition from concrete-semi-concrete to abstract. Whether one argues lack of experimental or maturational readiness is a philosophical question which does not resolve the problem. The important lesson to be learned is that a child who is forced (yes, forced) to operate abstractly without having

> first attained meaningful associations at the concrete level is doomed to frustration. He has two alternatives, both of which are educationally unsound: (1) he can experience repeated failure at the abstract level with its attendant ills of psychological damage or (2) he can learn to give responses by rote which is also undesirable in a mathematics program stressing meaning (p. 89).

Educators who realize the need for knowledge and understanding of the problem as a prerequisite to the problem solution and who also believe that secondary students are not always capable of logical abstract reasoning offer the semi-concrete as a bridge between the concrete and the abstract. Riedesel (1969) says:

> Make use of drawings and diagrams as a technique to help pupils solve problems. This technique is helpful to pupils of all ability levels. It forces the child to consider the problem situation. He cannot simply manipulate computation without understanding the basic "action" of the problem. Drawings may be used by the slow student of mathematics to solve problems that he could not otherwise solve. Also, the advanced student finds drawings of value in solving problems that involve complex relationships... (p. 55).

Bowers (1957) offers a similar suggestion when she writes:

> Deal with the social setting of the problem drawing as fully as is necessary on all devices available to the teacher, such as excursions, films, pictures, diagrams, dramatization and supplementary reading (p. 489).

Earp (1967) recommends the use of drawings in problem solving beginning at a lower grade level. He says:

> Related to flexibility in the solving of problems is the recommendation that the student receive instruction in drawing, diagramming, and/or using manipulative objects to represent a problem. As an example
>
> The road crew on a new highway pave 1/3 of a mile each day. How far can they expect to pave this week if they work 5 full days?
>
> 0 1/3 2/3 3 1 1/3 2/3 2
>
> On the basis of such a diagram the child may make his strategy for solving the problem that of addition. In this case he will have to be lead to multiplication. However he will certainly understand this situation and find the correct solution to be problem (p. 185-186).

Mathematics teachers have, for many years, suggested that their students use drawings in their attemtps to solve mathematics word problems. These suggestions are made because they are believed to be helpful. Teachers who make these suggestions may indeed be encouraged to find that many distinguished educators share this belief. The beliefs of these distinguished educators are usually formulated after years of study and teaching experience, but they are, nevertheless, only opinions and not empirical evidence. Empirical evidence is demanded in education today. Opinions, although valuable, no longer suffice as a basis for making decisions.

A review of the research that has been carried out related to the question of the effect of accurate and inaccurate pictorial representations of word problems upon the ability of secondary school students to arrive at correct

solutions to the problems has been included in Chapter II. This research has been limited and the findings have been inconclusive. It is most important that research in this area be continued.

Research in this area is needed for several different reasons. It is needed to help determine if mathematics textbooks at a secondary level should be written to include more graphs and pictorial representations. It is needed to help curriculum committees make decisions concerning the choice among textbooks. Perhaps research in this area is most needed to help classroom teachers make decisions concerning the use of pictures and graphs in teaching mathematics word problems.

Purpose of the study

The purpose of the study was to compare the results of mathematics word problems solved by tenth-grade students when these problems were presented in three different forms: in word form only, in word form accompanied by an accurate pictorial representation of the problem, and in word form accompanied by an inaccurate pictorial representation of the problem.

Hypotheses of the study

The study was designed to test nine hypotheses:

I. "Good" problem solvers will receive significantly higher scores on mathematics word problems that are presented in word form accompanied by an accurate pictorial representation of the problem than on mathematics word problems that are presented in word form only.

II. "Good" problem solvers will receive significantly higher scores on mathematics word problems that are presented in word form only than on mathematics word problems that are presented in word form accompanied by an inaccurate pictorial representation of the problem.

III. "Good" problem solvers will receive significantly higher scores on mathematics word problems that are presented in word form accompanied by an accurate pictorial representation of the problem than on mathematics word problems that are presented in word form accompanied by an inaccurate pictorial representation of the problem.

IV. "Average" problem solvers will receive significantly higher scores on mathematics word problems that are presented in word form accompanied by an accurate pictorial representation of the problem than on mathematics word problems that are presented in word form only.

V. "Average" problem solvers will receive significantly higher scores on mathematics word problems that are presented in word form only than on mathematics word problems that are presented in word form accompanied by an inaccurate pictorial representation of the problem.

VI. "Average" problem solvers will receive significantly higher scores on mathematics word problems that are presented in word form accompanied by an accurate pictorial representation of the problem than on mathematics word problems that are presented in word form accompanied by an inaccurate pictorial representation of the problem.

VII. "Poor" problem solvers will receive significantly higher scores on mathematics word problems that are presented in word form accompanied by an accurate pictorial representation of the problem than on mathematics word problems that are presented in word form only.

VIII. "Poor" problem solvers will receive significantly higher scores on mathematics word problems that are presented in word form only than on mathematics word problems that are presented in word form accompanied by an inaccurate representation of the problem.

IX. "Poor" problem solvers will receive significantly higher scores on mathematics word problems that are presented in word form accompanied by an accurate pictorial representation of the problem than on mathematics word problems that are presented in word form accompanied by an inaccurate pictorial representation of the problem.

Plan of the study

Three alternate tests were constructed to test the nine hypotheses of the study. These tests were

constructed by modifying the items contained in a testing instrument developed by Sherrill (1970). Each of the three alternate tests contained 21 items. Seven of the 21 items were mathematics word problems presented in word form only. These seven questions were called Type-A questions. Seven of the 21 items were mathematics word problems presented in word form accompanied by an accurate pictorial representation of the problem. These seven questions were called Type-B questions. The remaining seven items were mathematics word problems presented in word form accompanied by an inaccurate representation of the problem. These seven questions were called Type-C questions.

A pilot study was conducted prior to the main study. The pilot study involved 22 students from one intact middle-stream tenth-grade class in the city of St. John's. The purpose of the pilot study was to discover undue difficulties within the testing instrument, to check the adequacy of the instructions and the administrative procedures, and to check the reliability of the testing instrument when used with Newfoundland students.

Ten schools were chosen at random from the geographic region east of Grand Falls, Newfoundland (inclusive) and south of Carmanville, Newfoundland (inclusive). These schools were chosen as the sample for the study. The mathematics teachers from these ten schools selected a total of 90 "good", 98 "average" and 92 "poor" problem solvers. These selections

were made on the basis of agreement between at least two teachers and by use of the operational definitions of "good", "average" and "poor" problem solvers provided by the investigator.

The tests were administered to each group of students by the investigator. Care was taken to ensure that the three alternate tests were randomly distributed among the "good", "average" and "poor" problem solvers in each group. Each group of students were read the same instructions (Appendix F) and were given one two-hour afternoon session within which to complete their tests.

All tests were scored by the investigator and an analysis of the data was carried out.

CHAPTER II

REVIEW OF RELATED LITERATURE AND RESEARCH

Literature related to the study

The beliefs upon which the present study was based were strengthened and supported by the opinions of leading educators who believe that students can solve mathematics word problems only if they have knowledge and understanding of the problem. These educators also believe that secondary school students are not always capable of logical abstract thinking. Therefore, they suggest that teachers help their students find solutions to word problems by making abstract situations more concrete, and, further, that this may be done by use of the semi-concrete in the form of pictorial representations of problems, graphs and diagrams.

George Polya and his method of heuristics in problem solving in well known by mathematics educators. According to Polya there are four steps involved in the solving of problems. The first of these four steps is the need to understand the problem. In attempting to understand the problem Polya (1957) suggests one of the things the problem solver should do is draw a figure.

> If we have to examine various details, one detail after the other, it is desirable to draw a figure. If there are many details we cannot imagine all of them simultaneously, but they are all together on the paper. A detail pictured in our imagination may be forgotten; but the detail traced on paper remains, and, when we come back to it, it reminds us of our previous remarks, it saves us some of the trouble we have in recollecting our previous consideration (p. 103-104).

Bruner (1966) suggests that any problem can be represented in three different ways:

> 1. By a set of actions which relay the features of the knowledge to be imparted or give the steps to be followed in solving a problem.
> 2. By a set of summary images or graphics that represent a concept without defining it fully.
> 3. By a set of symbolic or logical prepositions (p. 45).

He goes on to stress the importance of considering all three of these techniques of representing knowledge when planning instructional strategies.

Gagne (1960) recognizes the usefulness of pictures in problem solving when he says, "Some people tend to solve mathematical problems by thinking out the solutions in terms of visual and spatial models... (p. 52)". Fugii (1963) suggests that problem solvers, "Build an outline of the problem with the given parts. Draw a diagram or figure, if possible (p. 171)."

Troutman and Lichtenberg (1974) list several specific abilities related to problem solving. One of these is the ability to translate a mathematical communication into

different forms, number sentences, graphing, diagramming, sketching, or developing original methods of translation. They state:

> Whenever a student carries out a variety of translative tasks with respect to a given mathematical communication, he is required to observe its pertinent details. In doing so he becomes prepared to deal with the communication in conjunction with other ones (p. 592).

This translation of a mathematical communication into different forms therefore assists the student in problem solving.

As early as 1930, Hanna reported that pupils who pictured their work graphically and pupils who used individual approaches were significantly better at problem solving than those who used a traditional approach.

Dahmus (1970) gives the following recommendation in an article designed to assist teachers in helping their pupils improve their problem solving abilities:

> Geometrical and pictorial methods are highly effective in combination with the algebraic when solving problems. All three methods are extremely useful wherever one converts verbal forms to non-verbal expressions (p. 127).

Alexander (1960) attempts to distinguish the characteristics that differentiate low and high achievers in problem solving. As a consequence of his study he gives several guides to planning instruction in problem solving. One of these guides is the interpretation of quantitative materials. He says:

> Development of the ability to interpret quantitative materials should be an integral part of the instruction of problem solving. Seventh graders need many opportunities to visualize and interpret facts and relationships in charts, tables, graphs and maps... (p. 606).

Marks, Purdy and Kinney (1958) state that part of the difficulty students have with finding solutions to mathematics word problems stems from their failure to see the relationship between the different parts of the problem.

Bassler and Kolb (1971) tend to agree with Marks, Purdy and Kinney when they state that failure to understand the physical situation portrayed by the problem contributes to the difficulty students have in trying to arrive at problem solutions.

Secondary school students sometimes have difficulty with the language in mathematics word problems. Over 60 years ago, Thorndike (1912) made the following statement in a paper read at a meeting of the Harvard Teachers Association:

> As you well know our measurement of ability in arithmetic is a measurement of two different things: sheer mathematical insight and knowledge on the one hand; and acquaintance with language on the other.

Similar statements have been made in the 63 years since that time.

It is the responsibility of mathematics educators to find ways to present word problems such that students are

not unduly restricted because of language difficulties. Trueblood (1969) states this responsibility in the following way:

> With textbook problems the poor reader cannot abstract the essential elements of a problem situation because of his low level of reading ability. The teacher therefore needs verbal problems that present less interference to the development of problem-solving skills (p. 7).

Henderson and Pingry (1953) deal with the subject of problem solving at length. They discuss problem solving both as a psychological process and as an instructional responsibility. Problem solving has many different aspects. One aspect is the production and retention of thought material relevant to the solution of the problem. The production and retention of thought material depends upon the "span of apprehension" or "immediate memory span" of the individual. The "span of apprehension" is said to have two dimensions: extent and duration. When a person attempts to obtain a solution to a problem he must hold in his immediate memory span what he is expected to find and what he is given to help him arrive at the desired conclusion. In addition to this he must be able to select from his past experience, information that will help him arrive at this solution. Henderson and Pingry suggest that one way teachers can help students become oriented to problems is to encourage them to draw pictures of the problems. A picture will help

clarify relationships that exist between the parts of a problem and will help keep these parts and relationships more readily available than when one tries to hold them in immediate memory span.

Johnson (1967) makes the following claim concerning how man thinks and attempts to solve problems:

> Man thinks in terms of tangible or visual representations - sketches, models, or mock-ups. He uses these devices to solve a problem, discover a new idea, or create a new product. These representations link thought processes and reality; they relate past experiences to a new situation. Thus, they help make transitions from one idea to another (p. 39).

Henderson (1954) also makes a statement supporting the use of pictures in the teaching of problem solving. He says:

> The diagram is used for all problems involving geometric figures and should show dimensions, both known and unknown. It is used primarily to help the student understand how to begin the problem. The diagram helps the student organize and remember the data of the problem (p. 276).

Bloom and Broder (1950) make the following suggestions concerning the use of pictures as an aid to problem solving:

(1) Don't let the physical format confuse the students
(2) If you use diagrams use them correctly
(3) Arrangement of data can distract from the meaning of the problem
(4) Indicate clearly how the questions are to be answered (p. 44)

Most educators seek to discover and use any aids that help students solve problems. Not all people, however, share this feeling. According to Coleridge (1926):

> Some persons have contended that mathematics ought to be taught by making the illustrations obvious to the senses. Nothing can be more absurd or injurious: it ought to be our never-ceasing effort to make people think, not feel (p. 52).

Other educators point out that the development of the ability to discriminate between the correct and the incorrect is a part of the problem solving process. Brownell (1951) states:

> Part of the real experience in problem solving is the ability to differentiate between the reasonable and the absurd, the logical and the illogical. Instead of being "protected" from error, the child should many times be exposed to error and be encouraged to detect and demonstrate what is wrong, and why (p. 440).

Bigge (1971) seems to agree with Brownell.

> Teachers usually do not let students make enough mistakes. Making mistakes often encourages us to re-examine something we had regarded as true (p. 326).

Summary and implications of literature related to the study

Over the years many educators have expressed the belief that graphs and diagrams used to accompany mathematics word problems help the student by making abstract situations more concrete. Included among these educators are: Hanna

(1930), Bloom and Broder (1950), Henderson and Pingry (1953), Henderson (1954), Polya (1957), Alexander (1960), Fugii (1963), Johnson (1967), and Dahmus (1970).

Marks, Purdy and Kinney (1958) join Bassler and Kolb (1971) in their belief that student difficulty with mathematics word problems sometimes arises because students fail to understand the physical situation of the problems.

Thorndike (1912) and Trueblood (1969) state that students sometimes fail to understand mathematics word problems because of language difficulties. They call for a method of presentation of word problems that do not unduly restrict students with language problems.

Brownell (1951) and Bigge (1971) stress the importance of exposing students to both the accurate and the inaccurate when teaching them to solve problems.

A few people, including Coleridge (1926), express the opinion that appealing to the senses should not play a role in teaching students to solve mathematics word problems.

Research findings related to the study

Although much research has been done in the area of problem solving, it is disappointing that so little has been done on the effectiveness of visual accompaniments with mathematics word problems at the secondary level. Teachers of secondary mathematics expect their pupils to function

abstractly. This expectation arises from a limited knowledge of the stages of human development set forth by various learning theorists. Piaget has had a tremendous influence upon the thinking and actions of teachers. However, it has never been purported or established empirically that all secondary students can function abstractly. Nor has it been established that these students cannot benefit by use of concrete or semi-concrete aids.

In 1932, Theodora Abel found that adults and children display similar modes of thinking and reasoning when confronted with problems of equivalent difficulty. In her experiment Abel read material of a high degree of difficulty to her adult subjects. These adults, in turn, wrote out what they remembered of the material and then read their reports to other adults. The last adults in the chain also wrote out what they remembered. When the written reports were compared with the original material, it was found that the adult subjects had betrayed the same prelogical modes of thinking characteristic of children who attempt to solve difficult problems.

Five teachers and 341 eighth-grade students took part in a study designed by Anderson (1957) to measure the efficiency of a kit of 16 visual-tactual devices in teaching area, volume and the Pythagorean relationship.

The 341 students were divided into two groups. The control group along with two teachers completed a unit of work chosen for the study. The experimental group along with three teachers completed the same unit of work. In addition, the experimental group used 16 visual-tactual devices developed to be used as aids for understanding the instructional material. The study resulted in the following findings:

1. Although not significant at the .05 level, there was some evidence to suggest that the visual-tactual devices did aid in learning the unit of work.

2. Students of low mental age in the experimental group scored lower on criterion. Again, this was not significant at the .05 level.

3. Students of high mental ability in the experimental group received scores on the criterion that were not related to the frequency of occasions during which they had used the visual-tactual aids.

Golledge (1966) conducted a study to test the view expressed by Piaget that young peole have mastered concrete reasoning by the time they reach the chronological age of 11 or 12 years and have mastered formal reasoning by the time they reach the chronological age of 16 or 17 years. Her sample included students from grades five to nine in an Iowa school. All students in the sample were administered a test consisting of 14 pairs of items. Each pair of items consisted

of a concrete reasoning item and an abstract reasoning item. The items were matched on the basis of a pilot study conducted in an attempt to develop a valid testing instrument. The results of this study led Golledge to conclude that many students below 16 years have not mastered either concrete or abstract reasoning but that both types of reasoning improve with age.

In the U.S.S.R. Gurova has made several attempts to study the problem of the effect of visual clues on problem solving. In 1960 he studied the effect of visual clues on the process of solving spatial problems. In this 1960 study, Gurova used different geometrical models to determine the importance of visual clues in the solution of spatial problems. He concluded that visual clues are sometimes helpful, sometimes not. The helpfulness depends upon the specific task to be performed. In 1969, Gurova continued his study in this area and investigated the function of concrete and imagery components in problem solving. L. Zusne gives us the following English summary of the conclusions Gurova reached as a result of his 1969 study:

> An analysis of visual and logical solutions of topological problems presented either visually or as sets of logical propositions show that two distinct but interrelated modes of thinking exist: a verbal mode and a mode that uses imagery. These two modes are not equivalent. Their use depends on the nature of the problem: in a serial or 2-dimensional problem, either mode works equally well. When a problem is characterized by an n-dimensional

space of parameters, the image mode is superior to the logical mode in that search time for a solution is vastly reduced,

Nelson (1968) designed a study to determine the relationship between verbal, visual-spatial and numerical abilities and the learning of the mathematical concept of function. His sample consisted of 284 eighth-grade students. One of the purposes of the study was to determine the efficacy of four different instructional methods of teaching the concept of function. These four instructional methods were classified as: a verbal treatment, a visual treatment, a numerical treatment and an eclectic treatment. Three eighth-grade classes were assigned to each of the four treatments for ten class periods. Results of the Special and Special Retention Tests showed that the visual treatment was more effective than the other three treatments when the total sample was considered. When the total sample was partitioned into ability groups this result was found to be greatest with students low on all three verbal, visual-spatial and numerical abilities.

In 1968, Hinz made a study which, although it did not use mathematical instructional materials, resulted in findings that have implications for studies that are mathematical.

Hinz used a group of college students in her study in an attempt to determine the relationship between the mode

of presentation and the mode of test response. The major premise of her study was that the test mode would influence the effectiveness of the presentation mode. The experimental modes used in the study were visual, auditory and a combination of these two. Her findings did not support her major premise. However, the study led Hinz to make the following interesting conclusion:

> This study found a marked superiority for visual over auditory presentations with college level students. This would imply the need to examine the conventional lecture without instructional visual materials.

Frandsen and Holder (1969) worked with a sample of 97 freshmen and sophomore students. They found that student success in solving complex verbal problems (defined as problems requiring mental representations and manipulation of data and conditions) correlated with the Space Relations (r=.56) and Differential Aptitude Test of Verbal Reasoning (r=.63) subtests. From the subtest sample 18 pairs of students were chosen to receive instruction in diagramatic representations of the components of the complex verbal problems. These 18 pairs were matched on verbal aptitude but selected at the extremes (high and low) in spatial-visualization aptitude. The remainder of the subtest sample served as a control group. A posttest on verbal problem-solving performance showed a significant gain only for those

students low in spatial-visualization aptitude who had received instruction.

Sherrill (1970) conducted a study to determine the effect of accurate and inaccurate pictorial accompaniments with mathematical word problems upon the achievement of tenth-grade students. Twenty word problems were chosen as the testing instrument. Each of these problems could be solved without pictures. A sample of 320 tenth-grade pupils was chosen for the study. Approximately one-third of this sample received Form A of the testing instrument. Form A contained the problems in verbal form only. Another one-third received Form B of the testing instrument. Form B contained the problems in verbal form accompanied by an accurate pictorial version of the problem. The remainder of the sample received Form C of the testing instrument. Form C contained the problems in verbal form accompanied by a distorted pictorial version of the problem. Intelligence scores, reading scores, grade average from ninth-grade mathematics courses were related to experimental achievement. Students who had received Form B scored significantly higher (.005 level) than students who had received the other two forms. Form C was found to be least effective (.005 level). A follow-up to this study was carried out by Webb and Sherrill (1974). The testing instrument used was that which had been used in the 1970 study by Sherrill but

the number of test items was reduced to those ten that were considered most appropriate for the sample. The instructions were written on the tests and the students were given explicit directions to read the instructions. Added to these instructions was the statement: "Some of the problems may include pictures or diagrams. If such pictures are included, they MAY OR MAY NOT BE ACCURATELY DRAWN". The sample consisted of 80 preservice elementary school teachers who were at that time enrolled in mathematics courses designed for prospective elementary school teachers. Even though the students had been told in the instructions that some of the pictures may be inaccurate, the findings from this follow-up study supported each of the findings of the 1970 study.

Archer (1972) studied the effect of concrete, semi-concrete and abstract teaching methods on mathematical achievement, transfer and retention at the college level. Thirty-three college freshmen were used as a sample. The sample was divided into three sections: concrete, semi-concrete and abstract. Each section was given instruction on principles related to the mathematical concept of function. Common lesson plans were followed for each of the three sections with the following exceptions: the semi-concrete section had its lesson plans supplemented with diagrams and drawings; the concrete section had its lesson

plans supplemented with physical materials constructed by the experimenter to serve as manipulative aids. The findings of this study supported the hypothesis that college students who are provided with concrete manipulative aids may be able to achieve, transfer and retain mathematical knowledge better than those who are not provided with these aids. This study did not support the hypothesis that semi-concrete visual aids are valuable learning aids.

A study by Kulm, Lewis, Omari and Cook (1974) investigated the relationship between aptitude and the effectiveness of textbook (T), student-generated (S), pictorial (P), textbook and pictorial (T+P), and student-generated with pictorial (S+P) presentations of mathematical word problems. The sample consisted of 116 ninth-grade algebra students. These students were randomly assigned to one of the five treatment groups where each subject was asked to solve ten problems. Performance was judged on the basis of the following five things: (a) correct answer, (b) correct method; that is, the use of the correct arithmetic operation and procedure, (c) percentage of total words and symbols copied during presentation, (d) percentage of critical information copied during presentation; that is, the numbers and relations necessary to solve the problem and a statement of the question of the problem, and (e) presence of a sketch in the notes or solution of the problems

(p. 31). Students in the (P) and (T+P) were found to copy a significantly greater ($p < .01$) percentage of words in attempting to arrive at a solution than students in the other treatments. The (P) treatment also gave significantly greater ($p < .01$) scores when making a sketch was the criterion. However, this study failed to reveal significant differences in treatment effects concerning the number of correct responses or the use of the correct method of solution for medium or high I.Q. students. Low I.Q. students used more correct methods of solution and obtained more correct answers when the (T) or (S) treatments were used. The (T+P) treatment was least effective of all the treatments ($p < .05$) with these students. The investigators suggested that the presence of pictures may confuse low I.Q. students rather than assist them in their problem solving attempts.

Summary and implications of research findings related to the study

A review of the research related to the present problem of the effectiveness of pictorial accompaniments in helping secondary school students solve word problems reveals a limited number of studies and inconclusive findings.

The studies of Abel (1932) and Golledge (1966) both supported the opinion that secondary school pupils do not always display logical abstract thinking even in situations

that demand this mode of thinking.

The use of visual aids in teaching different mathematical concepts to eighth-grade students was shown to be effective by Anderson (1957) and by Nelson (1968).

Kulm, Lewis, Omar and Cook (1974) did not find significant differences among pictorial treatments and other treatments in the solution of word problems by high and medium ability ninth-grade students. Low ability students, however, achieved least well when they had received the pictorial treatments. The investigators suggested that pictures may add to the confusion of low ability students rather than help them find solutions to word problems.

Sherrill (1970) reported that tenth-grade students who were given accurate pictorial accompaniments with word problems achieved significantly higher (.005 level) than students who had received either no pictorial accompaniments or inaccurate pictorial accompaniments. Students who had received no pictorial accompaniments achieved significantly higher (.005 level) than students who had received inaccurate pictorial accompaniments. This was supported by Webb and Sherrill (1974).

Frandsen and Holder (1968) found that only those freshmen and sophomore students who were low in spatial-visualization aptitude gained from instruction in

diagramatic representations of the components of complex verbal problems.

Studies by Gurova (1960, 1969) supported the view that visual treatments of word problems can be helpful but added that the degree to which such treatments are helpful depends both upon the type of students involved and upon the types of problems involved.

From her 1968 study, Hinz concluded that visual presentations are superior over auditory presentations with college students.

Archer (1972) found that college freshmen benefited from use of concrete aids in learning the mathematical concept of function but he failed to find support for use of semi-concrete aids in learning the same concept.

The problem investigated by these studies is not a trivial one that can be ignored because a limited number of studies have failed to reach general agreement among the findings. Much more research is needed.

The present study was designed with the sincere hope that the students and teachers of Newfoundland could contribute to the answer of a problem that includes them and extends far beyond them.

CHAPTER III

METHOD AND PROCEDURES

This study investigated the differences in the ability of tenth-grade students to arrive at correct solutions to mathematics word problems when these problems were presented in three different forms: in word form only, in word form accompanied by an accurate pictorial representation of the problem, and in word form accompanied by an inaccurate pictorial representation of the problem.

The present chapter includes sections on each of the following: the development of the testing instrument, a definition of terms used in the study, a description of the pilot study, the results of the pilot study, the selection of schools for the sample, the selection of students for the sample, the collection and analysis of the data, the limitations of the study, and a summary of the chapter.

Development of the testing instrument

The testing instrument used in the present study was a modified version of the instrument used by Sherrill in his study, The Effects of Different Presentations of

Mathematical Word Problems Upon the Achievement of Tenth Grade Students.

Sherrill developed his instrument in the following manner. First, he selected 40 problems from the Y- and Z-population test batteries of the National Longitudinal Study of Mathematical Abilities (NLSMA) and three mathematical textbooks: Dolciani, M.P., Berman, S.L., and Freilich, J. Modern Algebra Structure and Method Book One. New York: Houghton Mifflin Company, 1963; Jurgenson, R.C., Donnelly, A.J., and Dolciani, M.P. Modern Geometry Structure and Method. Boston: Houghton Mifflin Company, 1965; and Vannatta, Glen D., Goodwin, A.W., and Fawcett, H.P. Algebra One A Modern Course. Columbus: Charles E. Merrill Books, Inc. 1962.

Sherrill selected the 40 problems on the basis of two criteria:

> ...the problem could be solved without a pictorial representation of the problem situation
> ...the problem could be solved even if the pictorial representation of the problem situation were distorted.

Five distractors were constructed to accompany each of these 40 problems.

A pilot study was conducted by Sherrill using the problems in word form only without pictorial accompaniments and without the distractors. He conducted this pilot study to determine if a 55-minute class provided sufficient

time to carry out the administrative procedures and have the class finish the test items, to find the 20 problems that discriminated best among good and bad problem solvers, and to improve the set of distractors.

As a result of the pilot study the 20 problems that discriminated best among good and bad problem solvers were selected to be contained in the final testing instrument. Five distractors were chosen for each item (these distractors combined some which were created by Sherrill and some which were created by the subjects in the pilot study), and three forms of the final testing instrument were created. Form A contained each problem in word form only, Form B contained each problem in word form accompanied by an accurate pictorial representation of the problem, and Form C contained each problem in word form accompanied by an inaccurate pictorial representation of the problem.

Sherrill reported the reliability of his three final test forms as follows:

TABLE 1

Reliability coefficients of Sherrill's testing instruments

Form	Reliability coefficient (Cronbach's Alpha)
A	.40
B	.70
C	.53

In the present study the final testing instrument used by Sherrill was modified in several ways. The distractors were omitted from the questions. It was hoped that this omission would create for the students a problem solving situation that more closely paralleled a realistic classroom situation. It was further hoped that the omission of the distractors would eliminate the guessing of correct responses. It was decided not to use three forms of the same test. Instead, three alternate tests were used. Each test contained seven questions of Type-A, seven questions of Type-B and seven questions of Type-C. Since the final instrument used by Sherrill contained only 20 items, it was necessary to develop one additional item. The seven questions that were given as Type-A in Test I were given as Type-B in Test II and as Type-C in Test III. Question Seven is used to illustrate this.

In Test I, Question Seven was given as a Type-A question. That is, it appeared in words only.

Question 7--Test I

If the three points, whose coordinates are (-3, 2), (1, 5), (4, 1), are consecutive vertices of a square, what are the coordinates of the fourth vertex?

In Test II, Question Seven was given as a Type-B question. That is, it appeared in words accompanied by an

accurate pictorial representation of the problem.

Question 7--Test II

If the three points, whose coordinates are (-3, 2), (1, 5), (4, 1), are consecutive vertices of a square, what are the coordinates of the fourth vertex?

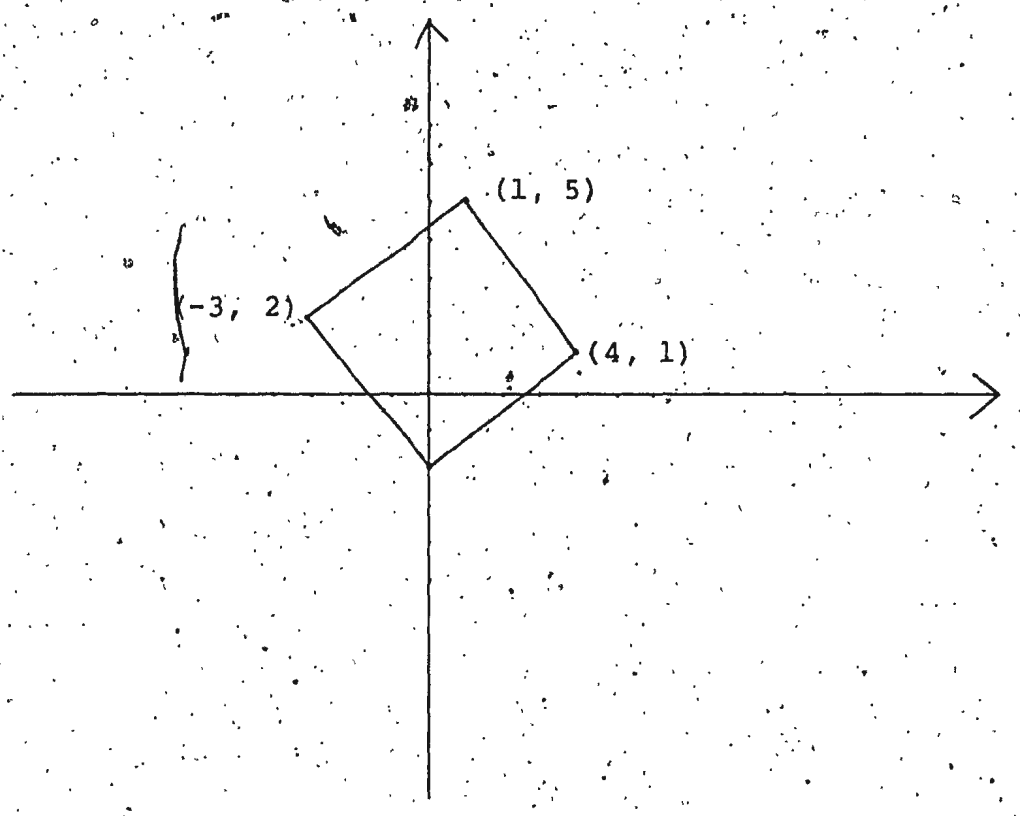

In Test III, Question Seven was given as a Type-C question. That is, it appeared in words accompanied by an inaccurate pictorial representation of the problem.

Question 7--Test III

If the three points, whose coordinates are (-3, 2), (1, 5), (4, 1), are consecutive vertices of a square, what are the coordinates of the fourth vertex?

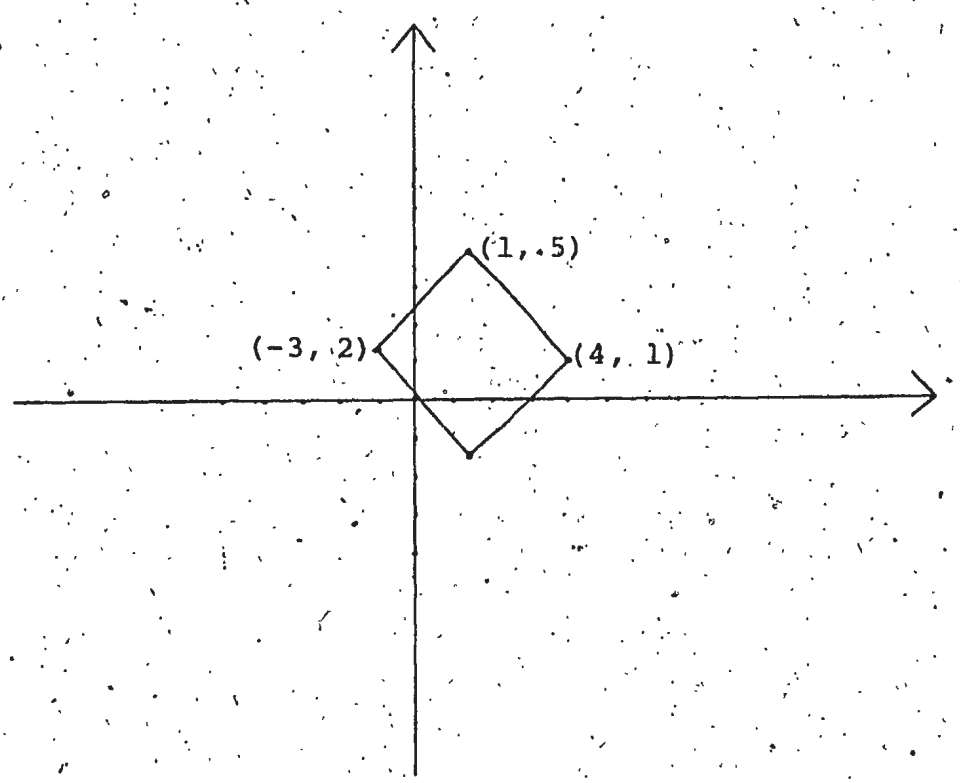

The remaining 14 questions of Test I were alternated in a similar manner in Tests II and III. This is summarized in Table 2.

TABLE 2

Summary description of tests

	Test I	Test II	Test III
Type-A	X	Y	Z
Type-B	Z	X	Y
Type-C	Y	Z	X

Where X represents seven test items, Y represents seven different items, and Z represents the remaining seven test items.

A more detailed description of the three tests is given in Table 3.

TABLE 3

Detailed description of tests

Item number	Test I	Test II	Test III
	Type		
1	A	B	C
2	B	C	A
3	C	A	B
4	B	C	A
5	C	A	B
6	A	B	C
7	A	B	C
8	B	C	A
9	C	A	B
10	B	C	A
11	C	A	B
12	A	B	C
13	A	B	C
14	B	C	A
15	C	A	B
16	B	C	A
17	C	A	B
18	A	B	C
19	A	B	C
20	B	C	A
21	C	A	B

TABLE 4

Tests items grouped on basis of difficulty

Type	Item no.	Item Mean (in percentage) reported by Sherrill	Item no.	Item mean (in percentage) reported by Sherrill	Item no.	Item Mean (in percentage) reported by Sherrill
	1	59.1	3	43.6	2	44.5
	6	32.7	5	29.1	4	31.8
	7	21.8	9	28.2	8	24.7
A	12	19.1	11	20.0	10	20.0
	13	17.3	15	17.3	14	18.2
	18	16.4	17	18.2	16	17.3
	19	10.9	21	14.5	20	13.6
Mean:		25.3		24.4		24.3
	4	60.0	18	74.7	9	89.5
	16	58.9	1	64.2	3	58.9
	20	49.5	6	53.7	5	44.2
B	8	44.8	7	43.7	21	44.2
	2	32.6	19	23.2	11	33.7
	10	27.4	13	22.1	15	14.7
	14	26.3	12	21.1	17	13.7
Mean:		42.8		43.2		42.7
	11	27.3	2	33.6	1	58.2
	3	24.5	4	30.0	6	37.3
C	9	20.0	14	21.8	12	14.5
	5	18.2	20	19.1	13	8.2
	21	13.6	8	19.0	19	7.3
	17	11.8	10	10.0	18	3.6
	15	11.8	16	5.5	7	2.7
Mean:		18.2		19.9		18.8

Definition of terms

The terms which follow were defined for use in the present study.

Word Problem: A word problem is defined as a problem that is capable of being solved by the application of some mathematical principle or operation when it is presented only in word form without the accompaniment of a pictorial representation.

Type-A Question: A Type-A question is defined as a word problem presented only in word form.

Type-B Question: A Type-B question is defined as a word problem presented in word form accompanied by an accurate pictorial representation of the problem.

Type-C Question: A Type-C question is defined as a word problem presented in word form accompanied by an inaccurate pictorial representation of the problem.

Test I: Test I is found in Appendix A. It consists of seven (#s 1, 6, 7, 12, 13, 18, 19) Type-A questions; seven (#s 4, 16, 20, 8, 2, 10, 14) Type-B questions; and seven (#s 11, 3, 9, 5, 21, 17, 15) Type-C questions.

Test II: Test II, found in Appendix B, is an alternate form of Test I. It consists of seven (#s 11, 3, 9, 5, 21, 17, 15) Type-A questions; seven (#s 1, 6, 7, 12, 13, 18, 19) Type-B questions; and seven (#s 4, 16, 20, 8, 2, 10, 14) Type-C questions.

Test III: Test III, found in Appendix C, is an alternate form of Test I. It consists of seven (#s 4, 16, 20, 8, 2, 10, 14) Type-A questions; seven (#s 11, 3, 9, 5, 21, 17, 15) Type-B questions; and seven (#s 1, 6, 7, 12, 13, 18, 19) Type-C questions.

Correct: A solution to a word problem is defined as correct when the answer in the answer space provided on the given test is the same as the corresponding answer provided in Appendix D.

Incorrect: A solution to a word problem is defined as incorrect when the answer in the answer space provided on the given test is not the same as the corresponding answer provided in Appendix D.

Population: The population is defined as all students from the geographic region east of Grand Falls, Newfoundland (inclusive) and south of Carmanville, Newfoundland (inclusive) who, during the academic year 1974-1975, were enrolled in an approved program of studies for tenth-grade students.

Sample: The sample is defined as the 280 students selected by their teachers on the basis of definitions provided to these teachers. These students attended ten schools chosen at random from the population (By using a Table of Random Digits).

Good Problem Solver: A good problem solver is defined as a student identified as "good" by agreement of at least two of his past or present mathematics teachers on the basis of the

following definition supplied to these teachers:

> A "good" problem solver is a student who can solve 70-100%* of the word problems that require solution in his present mathematics texts without seeking assistance from his classmates or teachers. He is one who shows confidence in his ability to arrive at a correct solution and will attempt alternative methods of solution when a present method fails.

Average Problem Solver: An average problem solver is defined as a student identified as "average" by agreement of at least two of his past or present mathematics teachers on the basis of the following definition supplied to these teachers:

> An "average" problem solver is a student who can solve 30-70%* of the word problems that require solution in his present mathematics texts without seeking assistance from his classmates or teachers. He is one who usually seeks verification that his solutions are correct and when his first or second attempt fails to yield a correct solution he will work no longer on his own but will seek assistance from his classmates or his teachers.

Poor Problem Solver: A poor problem solver is defined as a student identified as "poor" by agreement of at least two of his past or present mathematics teachers on the basis of the following definition supplied to these teachers:

> A "poor" problem solver is a student who can solve 0-30%* of the word problems that require solution in his present mathematics texts without

* Percentage arbitrarily chosen by the investigator.

seeking assistance from his classmates or teachers. He is one who has very little confidence in the correctness of his solutions as shown by the fact that he can easily be convinced a correct solution is false. He usually needs assistance before he can begin a problem and gives up in despair when his first attempt does not yield a correct solution.

The pilot study

A pilot study was conducted prior to the main study in an attempt to discover the following things:

1. to determine if students had undue difficulty with the questions without the aid of the distractors

2. to determine if an afternoon session (two hours) was sufficient time to conduct the study so that time could be omitted as a factor contributing to student performance

3. to determine if the administrative procedures and instructions (Appendix F) were adequate

4. to establish the reliability of the testing instrument in the Newfoundland setting.

This pilot study took place in one of the high schools in the city of St. John's. One intact middle-stream tenth-grade class of 22 students took part in this phase of the investigation. The investigator read the instructions (Appendix F) to the class during which time the three forms of test were randomly distributed to the students. The investigator remained with the class during the two-hour afternoon session. Approximately one-third of the students

had completed their tests after 60 minutes had elapsed. After 80 minutes had elapsed two-thirds of the students had completed their tests. At the end of the two-hour session only two tests remained to be collected. After all tests were collected the investigator held a short question period with the participants. At this time the participants were asked if they considered the test instructions to be adequate. They unanimously agreed that they did. They were also asked if they thought they could have gotten more test items correct if the test period were lengthened. There was unanimous agreement that they could not. At the end of this question period the investigator felt she could conclude that the administrative procedures and instructions were adequate and that an afternoon session (two hours) was sufficient time to conduct the study, so that time could be omitted as a factor contributing to student performance.

Results of the pilot study

One of the purposes of the pilot study was to determine if students had undue difficulty with the questions without the aid of the distractors. The percentage of correct responses for each test item is given in Table 5.

TABLE 5

Pilot study percentages of correct responses per test item

Test item	Percentage of correct responses
1	54.55
2	63.64
3	31.82
4	63.64
5	45.45
6	68.18
7	27.27
8	86.36
9	36.36
10	31.82
11	40.91
12	0.00
13	13.64
14	9.09
15	0.00
16	27.27
17	4.54
18	59.09
19	4.54
20	18.18
21	9.09

Table 6 gives a breakdown of the percentages reported in Table 5.

TABLE 6

Pilot study percentage of correct responses per test item classified by item type

Test item	Percentage of correct responses		
	Type-A	Type-B	Type-C
1	37.50	57.20	71.50
2	57.20	50.00	85.80
3	14.30	57.20	25.00
4	57.20	87.50	42.90
5	28.60	85.80	25.00
6	75.00	71.50	57.20
7	37.50	42.90	0.00
8	100.00	62.50	100.00
9	42.90	57.20	12.50
10	42.90	37.50	14.30
11	28.60	42.90	50.00
12	0.00	0.00	0.00
13	12.50	14.30	14.30
14	0.00	0.00	28.60
15	0.00	0.00	0.00
16	42.90	25.00	14.30
17	0.00	0.00	12.50
18	37.50	85.80	57.20
19	0.00	14.30	0.00
20	0.00	50.00	0.00
21	0.00	28.60	0.00

Although Table 6 revealed several instances where no student had responded correctly to the test item, it was decided that the students of the main study would not have undue difficulty with the questions without the aid of the distractors. This decision was based upon the overall percentages of correct responses reported in Table 6, upon the fact that the pilot study consisted of only 22 students, and upon that fact that these 22 students were a middle-stream class and were, therefore, unlikely to be totally representative of the "good" problem solvers who were to form a part of the main study.

The final purpose of the pilot study was to establish the reliability of the testing instrument in the Newfoundland setting. The split-half procedure was followed to obtain the adjusted Pearson-Product Moment Correlation Coefficients reported in Table 7.

TABLE 7

Reliability of tests calculated from pilot study scores

Test	Reliability coefficient
I	.93
II	.93
III	.85

These coefficients were deemed sufficiently high to proceed with the study.

Selection of schools for sample

The geographic region east of Grand Falls, Newfoundland (inclusive) and south of Carmanville, Newfoundland (inclusive) was defined from which the sample for the study was chosen.

Ten schools were chosen at random from this geographic region. At the same time back-up schools were chosen to be used if some schools refused to become a part of the sample. These random selections were made by use of a Table of Random Digits.

In March, a letter (Appendix E) was sent to each of the principals of the ten schools selected to become a part of the study. These letters requested the permission of the principals to have their schools included in the sample. They also included the instructions the schools were to follow if they agreed to participate in the study.

Seven of these ten principals most willingly agreed to have their schools participate in the study. The remaining three did not.

Although five schools had been selected as back-up schools to be used if some schools refused to become a part of the sample, some changes in this plan were believed necessary.

The five back-up schools selected were smaller schools. Two of the three schools that needed replacement were large schools. It was felt that the larger schools would not be adequately represented if all three schools were chosen from the back-up schools. Therefore, one school was chosen from the randomly selected group of five back-up schools. The remaining two schools were selected on the following basis:

1. the selected school represented the same city or town as the school it replaced

2. the selected school had a school population and programs of study similar to the school it replaced.

The final sample, then, consisted of eight schools chosen totally at random and two schools selected to closely parallel the two schools that had been chosen at random but had refused to become a part of the study.

Selection of students for sample

The selection of students for the sample was the responsibility of the individual schools. These schools were provided with a list of instructions (Appendix E) which they were asked to follow in making their selections.

Each school was asked to select a maximum of 30 students who were at the time enrolled in a tenth-grade mathematics program approved by the Newfoundland Department of Education. The schools were asked to make their

selections on the following basis: ten (fewer if the school could not provide ten) of the students selected were to be "good" problem solvers; ten (fewer if the school could not provide ten) of the students selected were to be "average" problem solvers; and ten (fewer if the school could not provide ten) of the students selected were to be "poor" problem solvers. Operational definitions of "good", "average", and "poor" were provided in the instructions. These operational definitions were provided in an attempt to reduce subjectivity of selection. A further attempt to reduce subjectivity of selection was the requirement that at least two teachers who were presently teaching the tenth-grade students mathematics or who had taught them mathematics in the ninth-grade agreed upon the selections made to fill each of the three categories of "good", "average", and "poor".

Early in April, a second letter (Appendix E) was sent to each of the ten participating schools. This letter suggested a time when the investigator planned to visit each school provided the suggested time was agreeable to the school. This second letter gave each school the opportunity to complete its final selection of students before the investigator visited the school. In all instances the pupils were told that they had been chosen to take part in a mathematics study and they were given the option to refuse to become a part of the study. The total final sample

consisted of 90 "good", 98 "average", and 92 "poor" problem solvers. At no time were the selected students told that they had been categorized as "good", "average" and "poor" problem solvers.

Collection of the data

All the data of the study was collected by the investigator during the final two weeks in April and the first week in May. Immediately before each afternoon session began, the participating teachers learned, for the first time, of the hypotheses to be tested by the study. The names of the participating students were written on the tests in an attempt to ensure that the three alternate tests were equally distributed among "good", "average" and "poor" problem solvers in each school. Each participating group of students was given the same instructions (Appendix F) and each was given one complete two-hour afternoon session within which to complete the tests.

Analysis of the data

The tests were scored by the investigator. An item response was accepted as correct when the answer in the answer space provided on the given test was the same as the corresponding answer provided in Appendix D. Each correct response was given one point. An item response was classified as incorrect when the answer in the answer space

provided on the given test was not the same as the corresponding answer provided in Appendix D. Each incorrect response was given no point.

After all of the test items had been classified as correct or incorrect, each student who had participated in the study was given four scores. The overall score of each student was the total number of correct responses he had made on the entire test. The overall score for each student was a number between 0 and 21 inclusive. The A-score for each student represented the number of Type-A questions he had responded to correctly. Each A-score was a number between 0 and 7 inclusive. Similarly, each student received a B-score and a C-score.

The overall scores are used in Chapter IV in Section One in a one-way analysis of variance carried out to test the assumption that no statistically significant differences existed among the scores of tests I, II and III.

In Section Two of Chapter IV the A-, B- and C-scores are used in three one-way analyses of variance to test the nine hypotheses of the study.

Limitations of the study

The findings of any study have a number of inherent restrictions. These reflect the weaknesses of the chosen design, methodology, sample and testing instruments.

One of the problems in the present study was the identification of "good", "average" and "poor problem solvers. While factors such as intelligence, reading ability or computational ability may or may not be found to be highly correlated with problem solving ability, evidence of the existence of such factors does not necessarily ensure a "good", "average" or "poor" problem solver. It may be argued that high school teachers who work with their students every day (sometimes over a period of several years) are most competent to identify and classify students as "good", "average" or "poor" problem solvers. Yet, any such teacher identification cannot escape an element of subjectivity. This study used classroom teachers to identify "good", "average" and "poor" problem solvers. It is believed that these teachers were best qualified to make such an identification. An attempt was made to reduce the subjectivity involved in such teacher identification by having the students selected on the basis of agreement by two teachers instead of one and by providing these teachers with operational definitions of "good," "average" and "poor" on which to make their selections.

A second problem was the limited number (seven) of questions of each type of problem that could be included in the test. If more than twenty-one items were included in any one test, fatigue might have biased the results. An attempt was made to overcome this problem by developing

three alternative tests so that, in effect, the total test included twenty-one questions of each of the three types. In the analysis, the three tests were considered a total test and comparisons were made among types of questions not among tests.

A third problem was the presentation of the questions to be solved in the form of a test. It is possible that students tend to believe more in the "correctness" of diagrams and pictures when they are presented as a part of a test item than when these same questions and pictorial representations are presented in regular classroom problem solving situations. This possibility could have biased the results of the tests, especially the results of Type-C questions. However, it can be argued that discrimination of the accurate from the inaccurate is a part of problem solving in any given situation.

A fourth problem was the limited geographic region from which the sample was chosen. Although the geographic region was limited, it was sufficiently large to include schools that ranged from large city schools with a tenth-grade enrollment of several hundred pupils to small outport schools with a tenth-grade enrollment of less than 30 pupils.

Summary

This chapter has described how the present study developed. It has described how the testing instrument

was developed, the pilot study, the method by which the sample for the study was selected, and the steps followed in the collection of the data.

CHAPTER IV

ANALYSIS OF DATA

This chapter is divided into three sections. The first section includes findings that test two assumptions of the study discussed in Chapter III. The second section includes the results of the statistical analysis of the data collected for each of the nine hypotheses in the study. The third section reports additional findings relevant to the study.

Findings related to study assumptions

The sample for the study was selected by classroom teachers. It was assumed that because these teachers had worked with their students every day for a period of one or more years they could correctly classify these students as "good", "average" or "poor" problem solvers when they were provided with operational definitions of "good", "average" and "poor". The data reported in Tables 8, 9, 10 and 11 appear to support this assumption.

TABLE 8

Percentage of correct responses per test item for good, average and poor problem solvers

Test item	Percentage of correct responses		
	Good	Average	Poor
1	56.67	36.73	15.22
2	57.78	41.84	20.65
3	47.78	34.69	15.22
4	63.33	47.96	25.00
5	58.89	25.51	9.78
6	82.23	58.16	27.17
7	32.22	19.39	9.78
8	84.44	54.08	30.43
9	58.89	48.89	25.00
10	36.67	21.43	10.87
11	46.67	19.39	11.96
12	10.00	2.04	0.00
13	31.11	15.31	6.52
14	51.11	18.37	6.52
15	20.00	5.10	0.00
16	47.78	26.53	5.43
17	23.33	3.06	0.00
18	76.67	63.27	42.39
19	14.44	4.08	1.09
20	52.22	32.65	23.91
21	20.00	8.16	1.09

Tables 9, 10 and 11 give a breakdown of the percentages reported in Table 8. This breakdown is on the basis of

problem type. Table 9 gives the percentage of correct responses per test item when the items were presented as Type-A questions.

TABLE 9

Percentage of correct responses per test item as Type-A question for good, average and poor problem solvers

Test item	Percentage of correct responses for Type-A questions		
	Good	Average	Poor
1	54.83	21.88	12.90
2	56.67	48.57	20.00
3	55.17	25.81	12.90
4	60.00	48.57	13.33
5	55.17	16.31	3.23
6	83.88	31.25	29.03
7	38.71	5.71	6.45
8	80.00	51.43	22.58
9	48.28	38.71	29.03
10	40.00	34.29	13.33
11	51.72	22.58	9.68
12	6.45	0.00	0.00
13	38.71	21.88	9.68
14	26.67	14.29	3.33
15	20.69	6.45	0.00
16	30.00	34.29	0.00
17	6.45	0.00	0.00
18	74.19	45.71	35.48
19	22.59	3.13	3.23
20	36.67	25.71	13.33
21	9.68	6.45	0.00

Table 10 gives the percentage of correct responses per test item when the items were presented as Type-B questions.

TABLE 10

Percentage of correct responses per test item as Type-B question for good, average and poor problem solvers

Test item	Percentage of correct responses for Type-B questions		
	Good	Average	Poor
1	82.76	61.29	25.81
2	70.97	31.43	19.35
3	60.00	62.86	6.67
4	74.19	48.57	45.16
5	60.00	45.71	20.00
6	86.21	74.19	22.58
7	41.38	45.16	45.16
8	87.10	45.71	41.94
9	86.67	68.57	40.00
10	51.61	20.00	12.90
11	40.00	25.71	6.67
12	20.69	3.23	0.00
13	31.03	12.90	6.45
14	64.52	20.00	9.68
15	33.33	8.57	0.00
16	64.52	20.00	12.90
17	27.67	5.71	0.00
18	93.10	67.74	48.39
19	44.83	9.68	0.00
20	74.19	46.88	45.16
21	33.33	17.14	3.33

Table 11 gives the percentage of correct responses per test item when the items were presented as Type-C questions.

TABLE 11

Percentage of correct responses per test item as Type-C question for good, average and poor problem solvers

Test item	Percentage of correct responses for Type-C questions		
	Good	Average	Poor
1	33.33	28.57	6.67
2	44.83	41.94	22.58
3	29.03	11.43	25.81
4	55.17	41.94	16.13
5	61.29	11.43	6.45
6	76.67	68.57	26.67
7	16.67	8.57	0.00
8	86.21	61.29	25.81
9	41.94	25.00	6.45
10	17.24	6.45	6.45
11	48.39	8.57	19.35
12	3.33	2.86	0.00
13	23.33	11.43	3.33
14	62.07	19.35	6.45
15	6.45	0.00	0.00
16	48.28	22.58	3.23
17	35.48	3.13	0.00
18	63.33	71.43	41.94
19	0.00	0.00	0.00
20	44.83	25.81	12.90
21	16.13	0.00	0.00

Three alternate tests were used in the study. This was done in order to increase the total number of questions of Type-A, Type-B and Type-C without increasing the number of items on any test. The results of a study by Sherrill (1970) were used to construct the three alternate tests, Test I, Test II and Test III. The method by which these tests were constructed is explained in detail in Chapter III. The assumption was made that Tests I, II and III were comparable and that there would be no statistically significant differences in the overall scores of the three tests. The results of a one-way analysis of variance of the tests scores follow. These results verified that the assumption was correct for the sample tested in the study.

TABLE 12

Mean and standard deviation of
Test I, Test II and Test III

Test	Mean	Standard Deviation
I	6.09	4.05
II	6.31	4.01
III	6.14	4.22

TABLE 13

Analysis of variance of scores of Tests I, II and III

Source of Variance	SS	df	MS	F	p
Between tests	3.22	2	1.61	.096	>.25
Within tests	4,667.18	277	16.84		

Hypotheses testing

This section reports the results of the statistical analysis of the data collected for each of the nine hypotheses in the study. The nine hypotheses in the study were stated in Chapter I. They are re-stated here in the null form.

Null hypotheses:

I. There is no significant difference (.05 level of confidence) in the scores obtained on Type-A questions and the scores obtained on Type-B questions for "good" problem solvers.

II. There is no significant difference (.05 level of confidence) in the scores obtained on Type-A questions and the scores obtained on Type-C questions for "good" problem solvers.

III. There is no significant difference (.05 level of confidence) in the scores obtained on Type-B questions and the scores obtained on Type-C questions for "good" problem solvers.

IV. There is no significant difference (.05 level of confidence) in the scores obtained on Type-A questions and the scores obtained on Type-B questions for "average" problem solvers.

V. There is no significant difference (.05 level of confidence) in the scores obtained on Type-A questions and the scores obtained on Type-C questions for "average" problem solvers.

VI. There is no significant difference (.05 level of confidence) in the scores obtained on Type-B questions and the scores obtained on Type-C questions for "average" problem solvers.

VII. There is no significant difference (.05 level of confidence) in the scores obtained on Type-A questions and the scores obtained on Type-B questions for "poor" problem solvers.

VIII. There is no significant difference (.05 level of confidence) in the scores obtained on Type-A questions and the scores obtained on Type-C questions for "poor" problem solvers.

IX. There is no significant difference (.05 level of confidence) in the scores obtained on Type-B questions

and the scores obtained on Type-C questions for "poor" problem solvers.

These nine hypotheses were tested by using three one-way analyses of variance followed in each case by a Scheffé test of multiple comparisons. This method of analysis was considered most appropriate since the underlying assumptions of these statistical tests were met by the study and since the method of analysis of variance achieved the purpose of the study by allowing for the estimation of how much variance in the scores was attributable to the different modes of presentation of the word problems and the decision of whether or not significant differences existed among the modes of presentation.

Testing null hypotheses I, II and III

The A-, B- and C-scores for "good" problem solvers were used to test null hypotheses I, II and III.

Table 14 gives the mean and standard deviation of the A-, B- and C-scores for "good" problem solvers.

TABLE 14

Mean and standard deviation of A-, B- and C-scores for "good" problem solvers

Score	Mean	Standard Deviation
A	3.00	1.60
B	4.10	1.60
C	2.70	1.37

A one-way analysis of variance revealed that a significant difference did exist among the three groups of scores. The results of this one-way analysis of variance are reported in Table 15.

TABLE 15

Analysis of variance of A-, B- and C-scores for "good" problem solvers

Source of Variance	SS	df	MS	F	p
Between Scores	97.80	2	48.90	20.04	$<.001$
Within Scores	652.00	267	2.44		

The Scheffé method of multiple comparisons revealed that the significant difference reported in Table 16 existed between A-scores and B-scores and between B-scores and C-scores but did not exist between A-scores and C-scores. The results of the Scheffé test are reported in Table 16.

TABLE 16

Multiple comparisons of A-, B- and C-scores for "good" problem solvers by the Scheffé method

Contrast	$\hat{\psi}$ *	$\hat{\sigma}^2_{\hat{\psi}}$ **	$\hat{\sigma}_{\hat{\psi}}$	$\hat{\psi}/\hat{\sigma}_{\hat{\psi}}$	$.95F_{(2,267)}$
$\mu_B - \mu_A$	1.10	0.05	0.23	4.78	3.00
$\mu_B - \mu_C$	1.40	0.05	0.23	6.09	3.00
$\mu_A - \mu_C$	0.30	0.05	0.23	1.30	3.00

* estimate of the contrast
** estimate of the variance

The results of the analysis of test scores for the "good" problem solvers who had taken part in the study showed that these students performed significantly better (.05 level) on Type-B questions than on either Type-A or Type-C questions. However there was no significant difference in their scores on Type-A and Type-C questions. It followed that null hypotheses I and III were rejected, but null hypothesis II

was not rejected.

Testing null hypotheses IV, V and VI

The A-, B- and C-scores for "average" problem solvers were used to test null hypotheses IV, V and VI.

Table 17 gives the mean and standard deviation of the A-, B- and C-scores for "average" problem solvers.

TABLE 17

Mean and standard deviation of A-, B- and C-scores for "average" problem solvers

Score	Mean	Standard Deviation
A	1.72	1.42
B	2.52	1.51
C	1.56	1.34

A one-way analysis of variance revealed that a significant difference did exist among the three groups of scores. The results of this one-way analysis of variance are reported in Table 18.

TABLE 18

Analysis of variance of A-, B- and C-scores for "average" problem solvers

Source of Variance	SS	df	MS	F	p
Between Scores	51.62	2	25.81	12.47	$< .001$
Within Scores	602.15	291	2.07		

The Scheffé method of multiple comparisons revealed that the significant difference reported in Table 19 existed between A-scores and B-scores and between B-scores and C-scores but did not exist between A-scores and C-scores. The results of the Scheffé test are reported in Table 19.

TABLE 19

Multiple comparisons of A-, B- and C-scores for "average" problem solvers by the Scheffé method

Contrasts	$\hat{\psi}$*	$\hat{\sigma}^2_{\hat{\psi}}$**	$\hat{\sigma}_{\hat{\psi}}$	$\hat{\psi}/\hat{\sigma}_{\hat{\psi}}$	$.95F_{(2,291)}$
$\mu_B - \mu_A$	0.80	0.04	0.21	3.80	3.00
$\mu_B - \mu_C$	0.96	0.04	0.21	4.57	3.00
$\mu_A - \mu_C$	0.16	0.04	0.21	0.76	3.00

* estimate of the contrast
** estimate of the variance

The results of the analysis of test scores for the "average" problem solvers who had taken part in the study showed that these students performed significantly better (.05 level) on Type-B questions than on either Type-A or Type-C questions. However there was no significant difference in their scores on Type-A and Type-C questions. It followed that null hypotheses IV and VI were rejected, but null hypothesis V was not rejected.

Testing null hypotheses VII, VIII and IX

The A-, B- and C-scores for "poor" problem solvers were used to test null hypotheses VII, VIII and IX.

Table 20 gives the mean and standard deviation of the A-, B- and C-scores for "poor" problem solvers.

TABLE 20

Mean and standard deviation of A-, B- and C-scores for "poor" problem solvers

Score	Mean	Standard Deviation
A	0.79	0.89
B	1.38	1.06
C	0.77	0.95

A one-way analysis of variance revealed that a significant difference did exist among the three groups of scores. The results of this one-way analysis of variance are reported in Table 21.

TABLE 21

Analysis of variance of A-, B- and C-scores for "poor" problem solvers

Source of Variance	SS	df	MS	F	p
Between Scores	19.02	2	9.51	10.01	<.001
Within Scores	258.97	273	0.95		

The Scheffé method of multiple comparisons revealed that the significant difference reported in Table 22 existed between A-scores and B-scores and between B-scores and C-scores but did not exist between A-scores and C-scores. The results of the Scheffé test are reported in Table 22.

TABLE 22

Multiple comparisons of A-, B- and C-scores for "poor" problem solvers by the Scheffé method

Contrast	$\hat{\psi}$*	$\hat{\sigma}^2_{\hat{\psi}}$**	$\hat{\sigma}_{\hat{\psi}}$	$\hat{\psi}/\hat{\sigma}_{\hat{\psi}}$	$.95F_{(2,273)}$
$\mu_B - \mu_A$	0.59	0.02	0.14	4.21	3.00
$\mu_B - \mu_C$	0.61	0.02	0.14	4.36	3.00
$\mu_A - \mu_C$	0.02	0.02	0.14	0.14	3.00

* estimate of the contrast
** estimate of the variance

The results of the analysis of test scores for the "poor" problem solvers who had taken part in the study showed that these students performed significantly better (.05 level) on Type-B questions than on either Type-A or Type-C questions. However there was no significant difference in their scores on Type-A and Type-C questions. It followed that null hypotheses VII and IX were rejected, but null hypothesis VIII was not rejected.

Additional findings

This section reports both the reliability of alternate tests, Tests I, II and III used in the study and

an additional finding which, although not supporting a hypothesis of the present study, is both interesting and relevant.

Chapter III (Table 7) reported the reliability coefficients of the alternate tests, Tests I, II and III using the results of the pilot study. Since the pilot study was limited to 22 middle-stream tenth-grade students it was deemed necessary to verify these reliability coefficients using the scores from the entire main study. The split-half procedure was followed to obtain the adjusted Pearson-Product Moment Correlation Coefficients. These coefficients are reported in Table 23.

TABLE 23

Reliability of tests calculated from study scores

Test	Reliability coefficient
I	.83
II	.77
III	.83

The split-half procedure to establish reliability was used in this study in preference to Cronbach's Alpha

used by Sherrill. This was done because the split-half procedure is more widely used and recognized as an acceptable measure of reliability. Furthermore, one of the greatest problems associated with the split-half procedure, that of dividing a test into comparable halves, could be avoided in the present study by using the results of the item analysis from Sherrill's study.

Each of the three alternate tests used in the present study contained 21 questions. Fourteen of these 21 questions were accompanied by either an accurate or an inaccurate pictorial representation of the problem. Seven of these 21 questions had no pictorial representation of the problem. The students were given no instructions concerning the use of their own pictorial versions of the problems. It was, therefore, interesting to find that the "good" problem solvers drew an additional 539 pictures to accompany their problems; the "average" problem solvers drew 436 pictures; and the "poor" problem solvers drew 300 pictures. Most of these student-drawn pictures were used with the Type-A questions. In many cases the student-drawn pictures were inaccurate and did not appear to help the students obtain correct solutions to their problems.

CHAPTER V

SUMMARY, RESULTS, CONCLUSIONS AND RECOMMENDATIONS FOR FURTHER STUDY

Summary

If schools of the present have one responsibility, it should be to provide opportunities for students to develop confidence and skill in problem solving. To rise from the level of trial and error in problem solving to the level of symbolism and abstractions is to be distinctively, man. Mathematics was created by man to help him solve problems. Mathematics educators, therefore, have the responsibility to help students find ways to use mathematics to solve problems.

Many mathematics educators believe that no single technique can help all students become proficient problem solvers. They further believe that techniques without meanings and understanding are useless. If teachers are to help students become better problem solvers, they must find ways to make problems more meaningful to their students. Many believe that mathematics word problems can become more meaningful when they are accompanied by accurate pictorial representations. The belief is that pictures will provide a link between the concrete situation that the problem represents

and the abstract reasoning needed for its solution. This belief, although shared by many people, has received very little research effort at the secondary school level. The limited number of studies that have been carried out have not always supported each other.

The purpose of the present study was to compare the results of mathematics word problems solved by tenth-grade students when these problems were presented in three different forms: in word form only, in word form accompanied by an accurate pictorial representation of the problem, and in word form accompanied by an inaccurate pictorial representation of the problem.

Three alternate tests, Tests I, II and III, were developed for the study. These alternate tests were constructed by using the items from a testing instrument developed by Sherrill in 1970. Each of the alternate tests contained the same 21 items. Each test contained seven Type-A questions, seven Type-B questions and seven Type-C questions. Questions classified as Type-A were mathematics word problems presented in word form only. Questions classified as Type-B were mathematics word problems presented in word form accompanied by an accurate pictorial representation of the problem. Type-C questions were mathematics word problems presented in word form accompanied by an inaccurate pictorial representation of the problem. The seven Type-A questions on one test appeared as Type-B

questions on the second test and as Type-C questions on the third test. For example questions numbered 1, 6, 7, 12, 13, 18 and 19 were presented as Type-A questions in Test I, as Type-B questions in Test II, and as Type-C questions in Test III.

A pilot study was conducted prior to the main study. The pilot study involved 22 students from one intact middle-stream tenth-grade class from one of the schools in the city of St. John's. The pilot study failed to suggest that any changes were needed in the plan of the study.

Ten schools were chosen at random to provide the sample for the study. These ten schools came from the geographic region east of Grand Falls, Newfoundland (inclusive) and south of Carmanville, Newfoundland (inclusive). Letters were sent to each of the principals of these ten schools asking for permission to use their schools in the study. Seven of the ten schools agreed to become a part of the study. An eighth school was chosen at random. A ninth and tenth school were selected to replace two of the three schools that had not agreed to become a part of the study. The total sample consisted of 90 "good", 98 "average" and 92 "poor" problem solvers selected from these ten schools. These 280 students were selected on the basis of agreement by at least two of their mathematics teachers that they satisfied the definitions of "good", "average" and "poor"

supplied by the investigator.

The investigator administered all the tests in the study. Each group of students was read the same instructions (Appendix F) and was given a maximum of one two-hour afternoon session within which to finish the tests. Care was taken to randomly distribute the three alternate tests among "good", "average" and "poor" problem solvers in each group. All tests were scored by the investigator. Each correct response was given one point. Each incorrect response was given no point.

The hypotheses of the study were tested by using three one-way analyses of variance followed in each case by a Scheffé test of multiple comparisons. The scores from the Type-A, Type-B and Type-C questions were used to test the hypotheses. The .05 level of confidence was set for all hypothesis testing.

The reliability of the testing instrument was checked by using the scores from the main study. The split-half procedure was followed and the adjusted Pearson-Product Moment Correlation Coefficients were found to be .83 for Test I, .77 for Test II and .83 for Test III.

Results of data analysis

The analysis of the data collected in the study gave the following results:

1. Hypothesis I was accepted. The "good" problem solvers in the study received significantly higher (.05 level of confidence) scores on mathematics word problems that were presented in word form accompanied by an accurate pictorial representation of the problem than they received on these same mathematics word problems presented in word form only.

2. Hypothesis II was rejected. There was no significant difference (.05 level of confidence) in the scores received by "good" problem solvers in the study on mathematics word problems presented in word form only and these same mathematics word problems presented in word form accompanied by an inaccurate pictorial representation of the problem.

3. Hypothesis III was accepted. The "good" problem solvers in the study received significantly higher (.05 level of confidence) scores on mathematics word problems that were presented in word form accompanied by an accurate pictorial representation of the problem than they received on these same mathematics word problems presented in word form accompanied by an inaccurate pictorial representation of the problem.

4. Hypothesis IV was accepted. The "average" problem solvers in the study received significantly higher (.05 level of confidence) scores on mathematics word problems that were presented in word form accompanied by

an accurate pictorial representation of the problem than they received on these same mathematics word problems presented in word form only.

5. Hypothesis V was rejected. There was no significant difference (.05 level of confidence) in the scores received by "average" problem solvers in the study on mathematics word problems presented in word form only and these same mathematics word problems presented in word form accompanied by an inaccurate pictorial representation of the problem.

6. Hypothesis VI was accepted. The "average" problem solvers in the study received significantly higher (.05 level of confidence) scores on mathematics word problems that were presented in word form accompanied by an accurate pictorial representation of the problem than they received on these same mathematics word problems presented in word form accompanied by an inaccurate pictorial representation of the problem.

7. Hypothesis VII was accepted. The "poor" problem solvers in the study received significantly higher (.05 level of confidence) scores on mathematics word problems that were presented in word form accompanied by an accurate pictorial representation of the problem than they received on the same mathematics word problems presented in word form only.

8. Hypothesis VIII was rejected. There was no significant difference (.05 level of confidence) in the scores received by "poor" problem solvers in the study on mathematics word problems presented in word form only and these same word problems presented in word form accompanied by an inaccurate pictorial representation of the problem.

9. Hypothesis IX was accepted. The "poor" problem solvers in the study received significantly higher (.05 level of confidence) scores on mathematics word problems that were presented in word form accompanied by an accurate pictorial representation of the problem than they received on these same mathematics word problems presented in word form accompanied by an inaccurate pictorial representation of the problem.

In summary, the inferred population findings of the present study follow: "good", "average" and "poor" tenth-grade problem solvers receive significantly higher (.05 level of confidence) scores on mathematics word problems that are presented in word form accompanied by an accurate pictorial representation of the problem than they receive on mathematics word problems presented in either word form only or in word form accompanied by an inaccurate pictorial representation of the problem. There is no significant difference (.05 level of confidence) in the scores received by these students on mathematics word problems presented in word form only and in mathematics word problems accompanied

by an inaccurate representation of the problem.

These results support the findings of Anderson (1957), Gurova (1960, 1969), Nelson (1968) and Hinz (1968) who found that the use of visual aids can be effective in teaching different mathematical concepts to students ranging from eighth-grade to college. No support was found for Kulm, Lewis, Omar and Cook (1974) who found that while pictorial treatments in the solutions of word problems seemed to have no significant influence upon the performance of high and medium ability ninth-grade students, such treatments seemed to confuse rather than help low ability students. Support, in part, was found for the studies of Sherrill (1970) and Webb and Sherrill (1974). Tenth-grade students in the present study, like the tenth-grade students in the study of Sherrill (1970) and the college students of Webb and Sherrill (1974), received significantly higher scores on mathematics word problems accompanied by an accurate representation of the problem than they received on mathematics word problems presented in either word form only or in word form accompanied by an inaccurate representation of the problem. However, whereas, the students in the studies by Sherrill (1970) and by Webb and Sherrill (1974) scored significantly higher on mathematics word problems presented in word form only than on mathematics word problems presented in word form accompanied by an inaccurate representation of the problem,

no such significant difference was found in the present study.

Conclusions

While realizing the limitations of any single study and the danger of drawing conclusions on the basis of very limited data, the investigator of any study is left with a general impression that is as much a product of the entire study as it is a product of the statistical analysis of the data.

The general impression from this study is that pictures and graphs can be a valuable teaching aid when helping secondary students solve mathematics word problems. Secondary students appear to believe that pictures and graphs help them find solutions to word problems. When no pictorial accompaniment is given with a problem many students will attempt to create their own pictorial representation of the problem. However, only pictures and graphs that are accurate help these secondary students arrive at correct solutions to their problems. Student drawn pictures are often inaccurate and therefore not helpful.

This study, then, has suggested four conclusions to the investigator:

1. Secondary students can benefit from the use of diagrams and graphs in teaching mathematics word problems.

2. When diagrams and graphs are used to help students solve word problems they should be accurate representations of the problem.

3. Secondary students need help in learning to distinguish accurate diagrams from inaccurate diagrams.

4. Secondary students need help in learning to construct accurate diagrams.

These conclusions tend to agree with the findings of Abel (1932) and Golledge (1966) that secondary students do not always display logical thinking even when this mode of thinking is demanded in the given situation. Furthermore, these conclusions support the opinions of educators such as Hanna (1930), Bloom and Broder (1950), Henderson and Pingry (1953), Henderson (1954), Polya (1957), Alexander (1960), Fugii (1963), Johnson (1967) and Dahmus (1970) who state that the use of semi-concrete aids can help secondary students solve mathematics word problems by making abstract situations more concrete.

Recommendations for further study

The findings and conclusions from the present study have suggested the following recommendations as topics of further research:

1. It is recommended that the present study be replicated with tenth-grade students using a testing instrument containing different test items.

2. It is recommended that studies similar to the present study be conducted with eleventh- and twelfth-grade students to try and determine if there exists a level in secondary mathematics where the semi-concrete can be discarded as no longer useful.

3. It is recommended that experimental studies at different grade levels be carried out to compare the results of secondary students who are given a unit of classroom instruction in learning to distinguish accurate diagrams from inaccurate diagrams and secondary students who do not recieve such instructions.

4. It is recommended that experimental studies at different grade levels be carried out to compare the results of secondary students who are given a unit of classroom instruction in learning to construct accurate diagrams and secondary students who do not receive such instruction.

REFERENCES

Abel, Theodora M. Unsynthetic modes of thinking among adults. American Journal of Psychology, 1932, 44, 123-132.

Alexander, Vincent E. Seventh graders' ability to solve problems. School Science and Mathematics, 1960, 60, 603-606.

Anderson, George R. Visual-tactual devices---their efficacy in teaching area, volume, and the Pythagorean relationship to eighth grade children (Doctoral dissertation, The Pennsylvania State University) Ann Arbor, Mich: University Microfilms, 1957, No. 58-214.

Archer, Julian Andrew. Effect of concrete, semi-concrete and abstract teaching methods on mathematical achievement, transfer, and retention at the college level (Doctoral dissertation, George Peabody College for Teachers) Ann Arbor, Mich: University Microfilms, 1972, No. 72-25, 370.

Bassler, Otto C. and Kolb, John R. Learning to teach secondary school mathematics. Intext Educational Publishers, 1971.

Bloom, B.S. and Broder, L.J. Problem solving process of college students. Chicago: The University of Chicago Press, 1950.

Bowers, Joan E. Procedure to strengthen ability to solve arithmetic problems. School Science and Mathematics, 1957, 57, 485-493.

Brownell, William A. Problem-solving. The Psychology of Learning. The Forty-First Yearbook of the National Society for the Study of Education. Chicago: The University of Chicago Press, 1951, 415-443.

Bruner, Jerome S. Toward a theory of instruction. Cambridge, Mass: The Belknap Press of Harvard, 1966.

Coleridge, S.T. Lectures on Shakespeare, Bohn Library, 1926.

Dahmus, Maurice E. How to teach verbal problems. School Science and Mathematics, 1970, 70, 121-138.

De Zafra, Carlos Jr. Teaching for critical thinking. The Clearing House, 1966, 41, 231-234.

Earp, N. Wesley. Problem-solving---arithmetic's persistent dilemma. School Science and Mathematics, 1967, 67, 182-188.

Educational Policies Commission. The central purpose of american education. Washington: Educational Policies Commission of the National Education Association, 1961, 12.

Fitzgerald, William M. The role of mathematics in a comprehensive problem solving curriculum in secondary schools. School Science and Mathematics, 1975, 75, 40.

Frandsen, Arden N. and Holder, James R. Spatial visualization in solving complex verbal problems. Journal of Psychology, 1969, 73, 229-233.

Fujii, John N. An introduction to the elements of mathematics. New York: London, John Wiley and Sons, Inc. 1963.

Gagne, Robert. Implications of some doctrines of mathematics teaching for research in human learning. Research Problems in Mathematics Education, edited by P. DuBois and R. Feierabend. Washington, D.C.: Government Printing Office, 1960, 52-53.

Golledge, Margaret Ruth. The development of Piaget type formal and concrete reasoning (Doctoral dissertation, The University of Iowa) Ann Arbor, Mich: University Microfilms, 1966, No. 66-7201.

Gurova, L.L. (Psychological Institute Akad Pedagogicheskikh Nauk RSFSR) Vliicanie Zritel 'noi Opory na protsess reheniia prostrans tvennykh zadach (Effect of visual clues on the process of solving spatial problems) Doke.Akad.Pedag.Nauk RSFSR, 1960, No. 5, 57-60.

--------. (Institute of Psychology, Moscow, USSR) Funktsiya Naglyadnoobraznykh komponentov v reshenii zadach (The function of concrete and imagery components in problem solving) Voprosy psikhologii, 1969, 15, 76-89.

Hanna, Paul R. Methods of arithmetic problem solving. Mathematics Teacher, 1930, 23, 442-450.

Hazlitt, V. Children's thinking. British Journal of Psychology, 1930, 23, 354-361.

Henderson, Ronald. How I teach analysis of verbal problems. The Mathematics Teacher, 1954, 47, 275-276.

Henderson, Kenneth B. and Pingry, Robert E. Problem solving in mathematics. The Learning of Mathematics Its Theory and Practice. The Twenty-first Yearbook of The National Council of Teachers of Mathematics. Washington, D.C.: The National Council of Teachers of Mathematics, 1953, 228-270.

Hildebrandt, E.H.C. Mathematical modes of thought. The Growth of Mathematical Ideas K-12. The Twenty-fourth Yearbook of The National Council of Teachers of Mathematics. Washington, D.C.: The National Council of Teachers of Mathematics, 1959.

Hinz, Marion Carol. The effect of response mode on the learning efficiency of presentation mode (Doctoral dissertation, Indiana University) Ann Arbor, Mich: University Microfilms, 1967, No. 68-4726.

Johnson, Donovan A. Instructional materials in the mathematics classroom. National Education Association Journal, 1967, 56, 39-40.

Kulm, Gerald, Lewis, Joan F., Omari, Issa and Cook, Harold. The effectiveness of textbook, student-generated, and pictorial versions of presenting mathematical problems in ninth-grade algebra. Journal for Research in Mathematics Education, 1967, 56, 39-40.

Marks, J.L., Purdy, Richard C., and Kinney, Lucien B. Teaching Arithmetic for Understanding. New York: McGraw-Hill Book Company, Inc., 1958.

Nelson, Leonard Theodore. The relationship between verbal, visual-spatial and numerical abilities and the learning of the mathematical concept of function (Doctoral dissertation, The University of Michigan) Ann Arbor, Mich: University Microfilms, 1969, No. 69-12, 196.

O'Brien, Katharine E. Problem-solving. The Mathematics Teacher, 1956, 49, 79-86.

Polya, George. How To Solve It. (2nd. edition) New York: Doubleday Anchor Books, 1957.

Riedesel, C. Alan. Problem solving: some suggestions from research. The Arithmetic Teacher, 1969, 16, 54-58.

Sherrill, J.M. The effects of differing presentations of mathematical word problems upon the achievement of tenth grade students (unpublished doctoral dissertation, University of Texas) 1970.

--------, and Webb, L.F. The effects of differing presentations of mathematical word problems upon the achievement of preservice elementary teachers. School Science and Mathematics, 1974, 74, 559-565.

Spitzer, H.F. Teaching Elementary School Mathematics. National Education Association. Association of Classroom Teachers, 1970.

Thorndike, E.L. The measurement of educational products (paper read at the meeting of Harvard Teachers Association, Cambridge, March 9, 1912) The School Review, 20, No. 5.

Troutman, Andria Price and Lichtenberg, Betty Plunkett. Problem solving in the general mathematics classroom. The Mathematics Teacher, 1974, 67, 590-596.

Trueblood, Cecil R. Promoting problem solving skills through nonverbal problems. The Arithmetic Teacher, 1969, 16, 7-9.

Underhill, Robert. Teaching Elementary School Mathematics. Charles Merrill Publishing Company, 1972.

APPENDIX A

Test I

Question 1

A rectangular room is 10 feet wide, 40 feet long, and 8 feet high.

A spider is on one end wall, exactly half way between the side walls, and one foot above the floor. A fly is on the other end wall, exactly half way between the side walls, and one foot below the ceiling. The fly is asleep and stays where it is.

What is the <u>shortest</u> distance the spider can crawl to catch the fly (there isn't time to spin a web)?

Work your problem in the space provided below:

Place your answer in the following space ----------

Question 2

In a certain classroom, the teacher notes that when the attendance is 92% there are exactly seven empty seats, but when attendance is 88% there are exactly eight empty seats.

What is the total number of empty seats when attendance is 100%?

Work your answer in the space provided below:

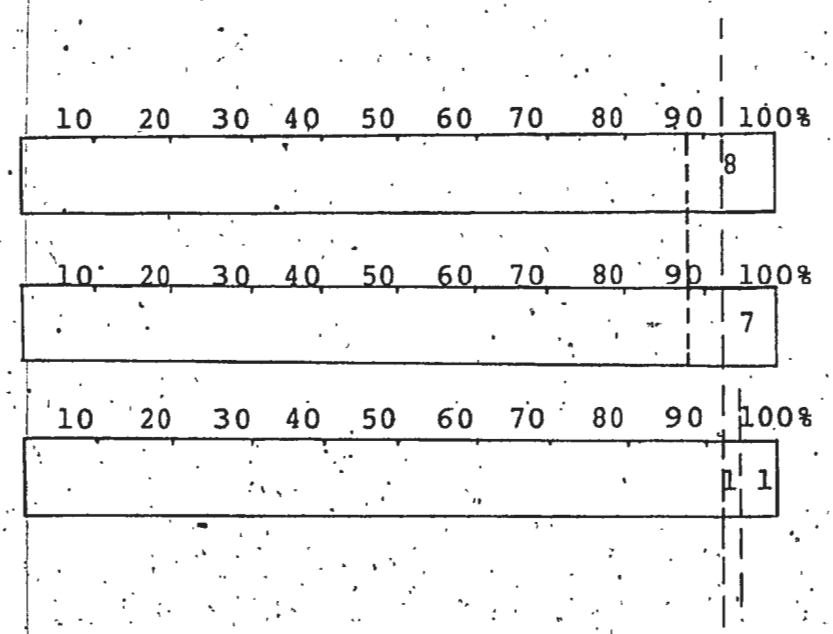

Place your answer in the following space ----------

Question 3

If you were driving down U.S. Highway 171 and you were just leaving the town of T then you would be 6 miles from the town of L. When you get to the town of L, if you continue to drive in the same direction then you would be 3 miles from the town of P.

Continuing in the same direction as you were driving eventually you would arrive in the town of R. R is twice as far from T as it is from P.

How far is the town of R from the town of L?

Work your problem in the space provided below:

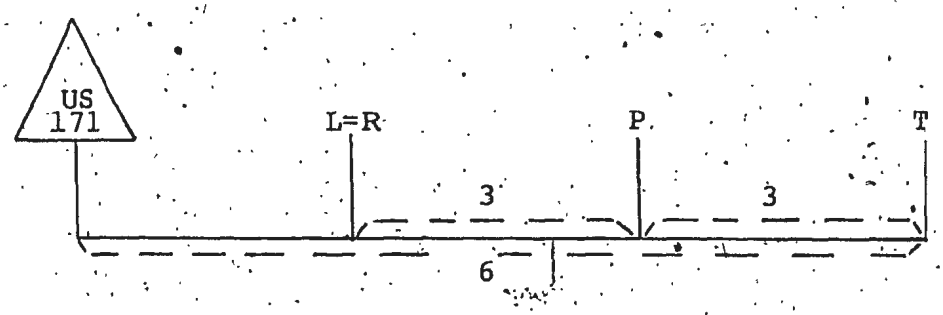

Place your answer in the following space ----------

Question 4

Each of five children (Joe, Sam, Sue, Jim, and Pam) chooses his favorite color.

Joe and Sam choose the same color; Sam and Sue do not choose the same color; Sue and Jim do not choose the same color; also Jim and Pam do not choose the same color.

What is the smallest number of different colors that could have been chosen?

Red-Blue-Red-Blue-Red

Work your problem in the space provided below:

Place your answer in the following space ----------

Question 5

The circumference (distance around) of a circle is 24 and the length of a minor arc is 4.

What is the measure (in degrees) of the central angle formed by the two radii which intersect the circle to form the arc?

Work your problem in the space provided below:

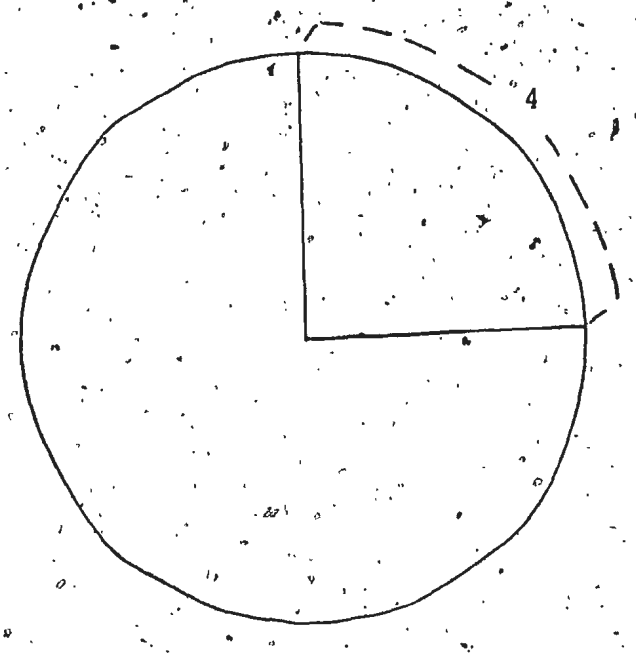

Place your answer in the following space ----------

Question 6

Eleven boys stand in a circle. No two boys standing next to each other have on shirts of the same color.

What is the minimum number of colors the eleven boys' shirts can be?

Work your problem in the space provided below:

Place your answer in the following space ----------

Question 7

If the three points, whose coordinates are (-3, 2), (1, 5), and (4, 1) are consecutive vertices of a square, what are the coordinates of the fourth vertex?

Work you problem in the space provided below:

Place your answer in the following space ----------

Question 8

A man 6 feet tall, resting against a telephone pole, casts a 4-foot shadow. If the telephone pole casts a 20-foot shadow, how high is it?

Work your problem in the space provided below:

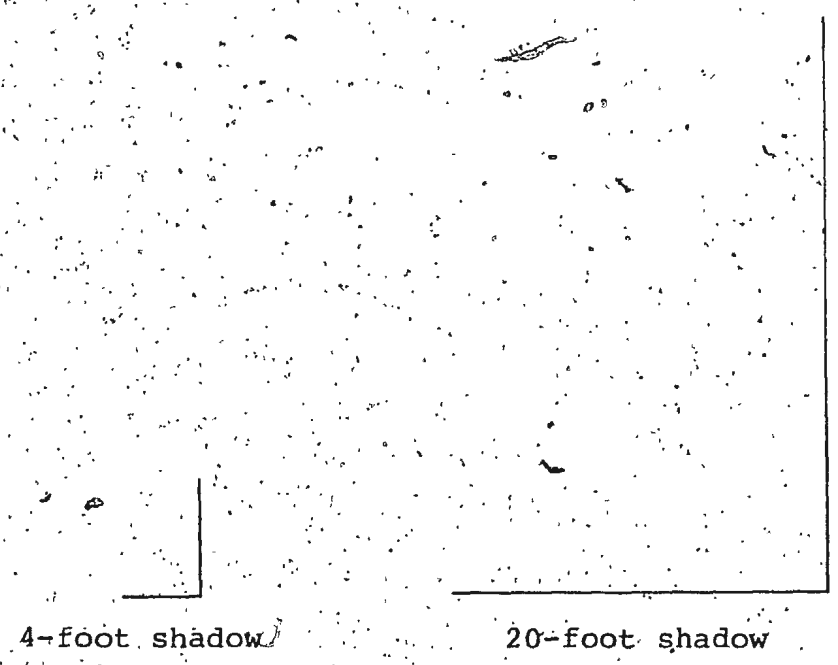

Place your answer in the following space ----------

Question 9

What geometric figure is formed when one connects (1, 2), (-2, 2), (-2, -4), (4, 2) and (1, 2)?

Work your problem in the space provided below:

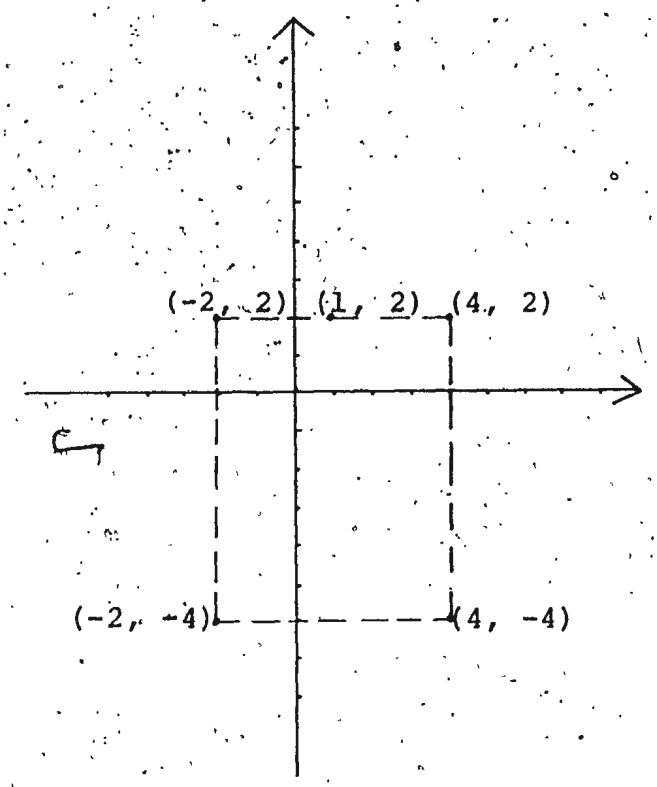

Place your answer in the following space ----------

Question 10

S is a cardboard circular disc of radius R. How many circular cardboard discs of radius 1/2R can be placed on S such that the smaller discs do not touch each other?

Work your problem in the space provided below:

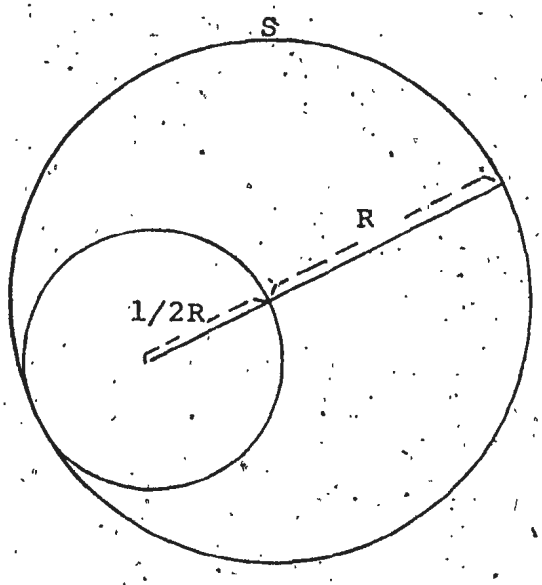

Place your answer in the following space----------

Question 11

A coat, regularly priced at $50.00, is on sale for a 25% discount. After the sale the coat was marked up 30%, what does it cost now?

Work your problem in the space provided below:

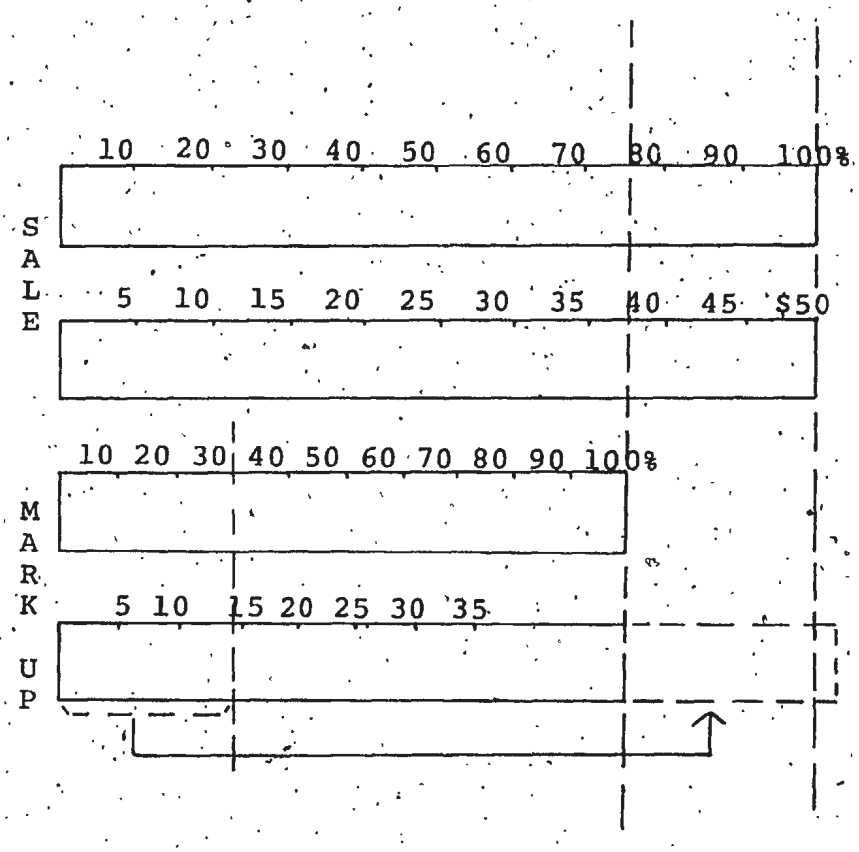

Place your answer in the following space.----------

Question 12

A cardboard box (with no lid) is 3 feet long, 2 feet wise, and 1 foot deep. In the box are a couple of fleas, George and Lee. George is in the corner of the box where the side wall meets the end wall, at the very top of the box. Lee is in the corner where the opposite side wall meets the opposite end wall and is at the very bottom of the box.

What is the shortest path George can take to get to Lee always remaining in contact with the box?

Work your problem in the space provided below:

Place your answer in the following space ----------

Question 13

In 1964 the average salary of a skilled worker in the United States of America was $3,000.; in 1965, $3,400.; in 1966, $4,300.; in 1967, $5,000.; in 1968, $6,000.

In what year was there the greatest percentage increase in average salary?

Work your problem in the space provided below:

Place your answer in the following space ----------

Question 14

A farmer has a plot of land 20 feet by 15 feet. Let's call the plot of land ABCD such that AB is 20 feet, BC is 15 feet, CD is 20 feet, and AD is 15 feet.

There are three paths running through ABCD. The first path is $\overline{AM}$ where M is some point of $\overline{BC}$; the second path is $\overline{PQ}$ where P is some point of $\overline{AB}$ and Q is some point of $\overline{CD}$ such that $\overline{PQ}$ is perpendicular to both $\overline{AB}$ and $\overline{CD}$.

The last path is $\overline{RS}$ where R is some point on $\overline{AD}$ and S is some point of $\overline{BC}$ such that $\overline{RS}$ is perpendicular to both $\overline{AD}$ and $\overline{BC}$.

If one walks down $\overline{AM}$ 10 feet one finds a point Z where three paths intersect.

Given PZ is 6 feet find the <u>total</u> area in square feet of the two plots of land RDQZ and PBSZ.

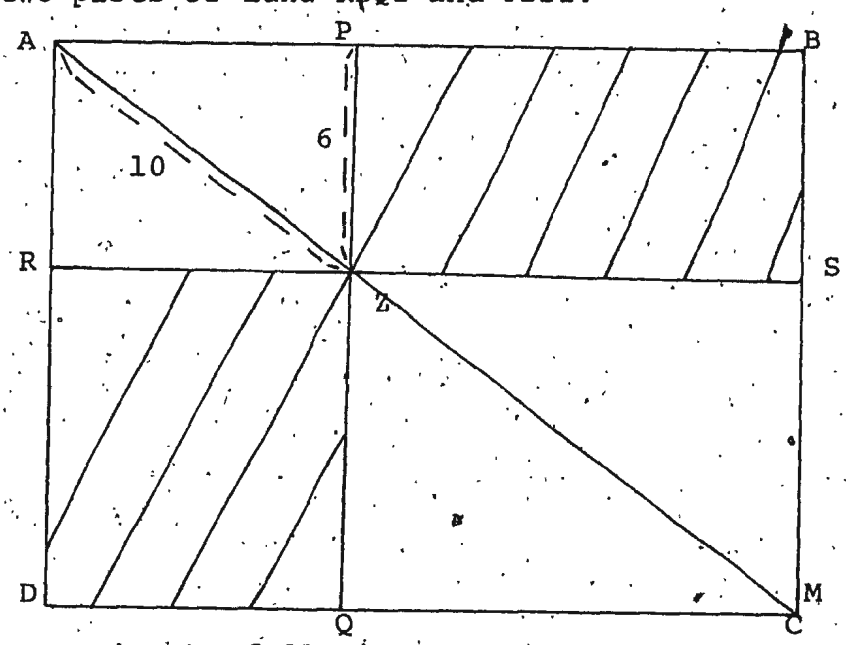

Place your answer in the following space ----------

Question 15

A rectangle has length 140 feet and width 3/7 of its length. What is the area of the inscribed circle of the rectangle? Give your answer in terms of (pi) .

Work your problem in the space provided below:

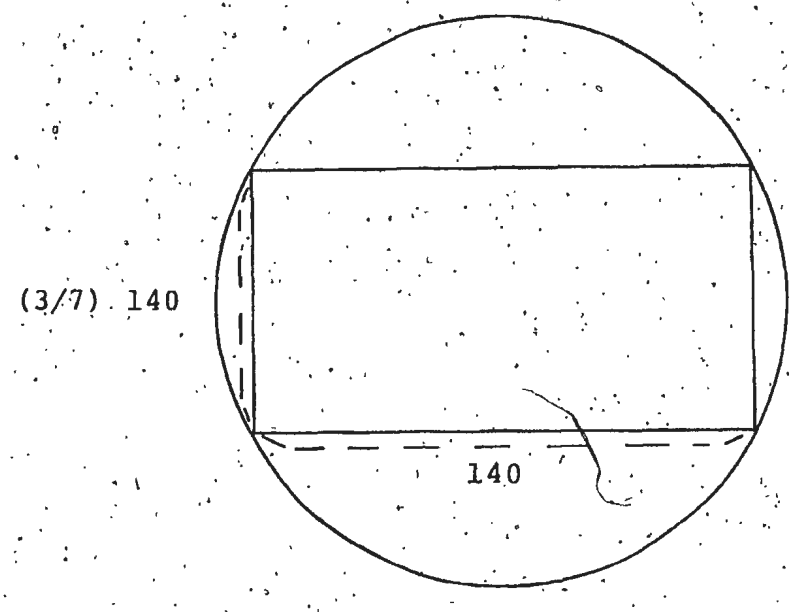

Place your answer in the following space ----------

Question 16

At what point will the graphs y=x+3 and y=2x+5 intersect?

Work your problem in the space provided below:

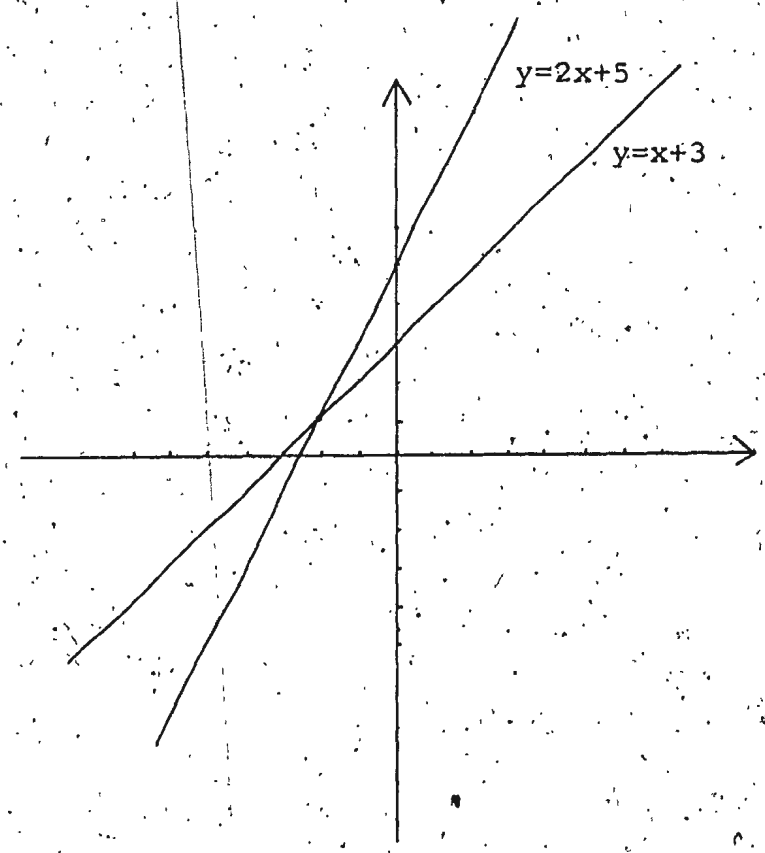

Place your answer in the following space ----------

Question 17

S is a square region with vertices (2, 5), (-4, -1), (8, -1), and (2, -7). T is a square region with vertices (0, 3), (6, 9), (6, -3), and (12, 3).

What is the area of the rectangular region formed by the intersection of S and T?

Work your problem in the space provided below:

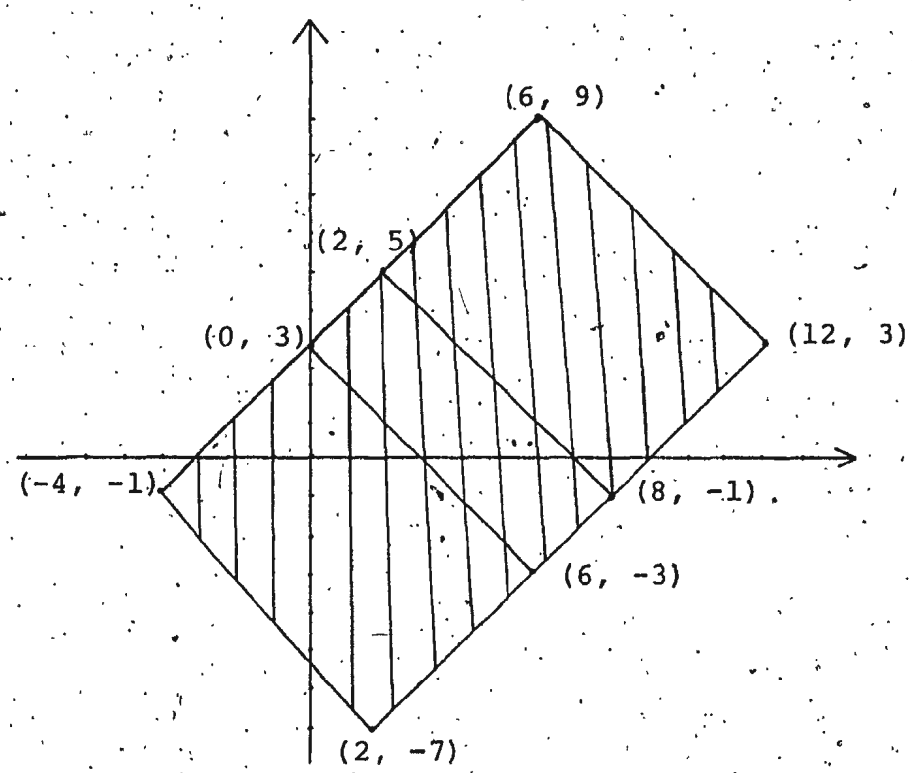

Place your answer in the following space ----------

Question 18

What geometrical figure can contain <u>all</u> of the following points: (-3, 4), (3, 4), (-5, 0), (3, -4), (5, 0), (-3, -4), (0, 5), (0, -5)?

Work your problem in the space provided below:

Place your answer in the following space ----------

Question 19

Square W, which has a side of length 4, circumscribes circle S. $\overline{AB}$ is the diameter of S such that A and B are points of intersection of S and W.

P is a point of intersection between S and W such that P does not belong to $\overline{AB}$.

What is the area of triangle APB?

Work your problem in the space provided below:

Place your answer in the following space ----------

Question 20

If circles S and T lie in the same plane and have no points in common, how many distinct lines are there which are tangent to both S and T?

Work your problem in the space provided below:

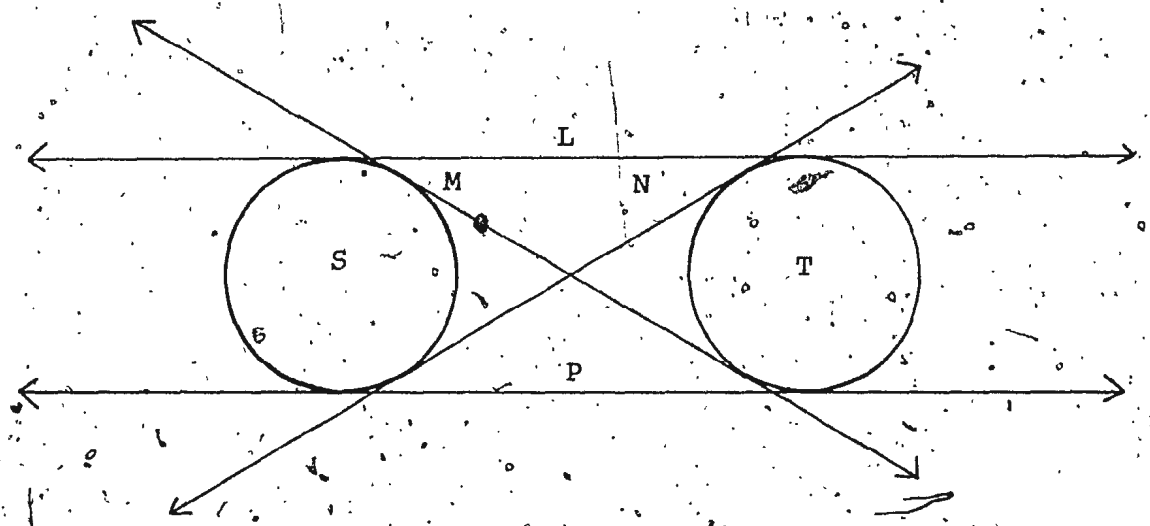

Place your answer in the following space ----------

Question 21

S is a square with vertices (1, 1), (1, 4), (4, 4), and (4, 1). The graph of the function $f(x)=2x+1$ intersects S in two points. One point is (1, 3), what is the other point?

Work your problem in the space provided below:

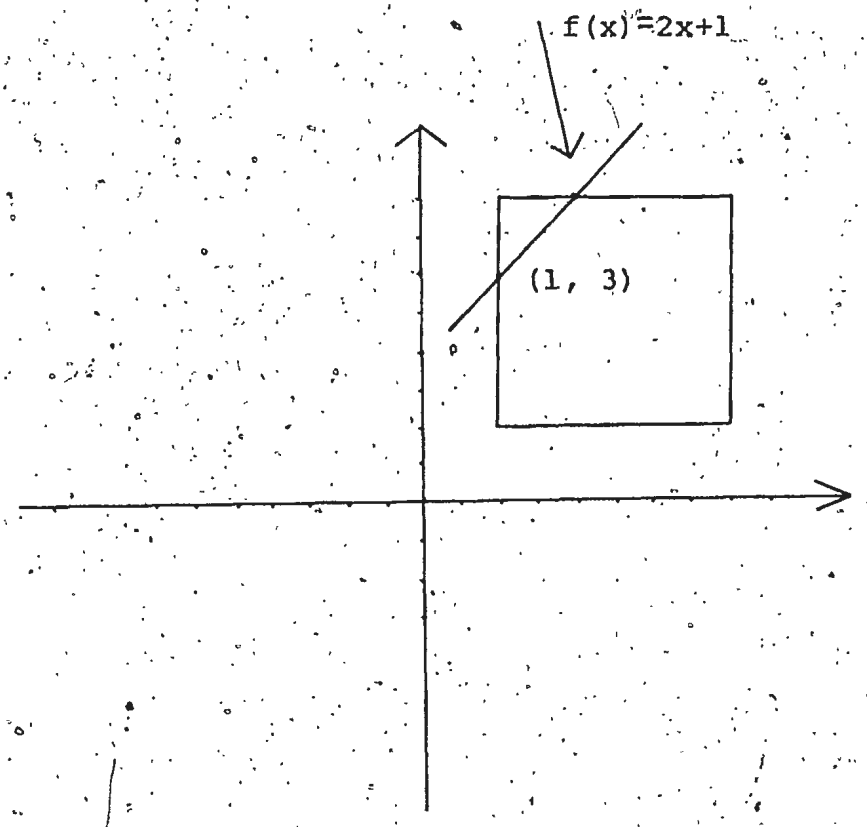

Place your answer in the following space ----------

APPENDIX B

Test II

Question 1

A rectangular room is 10 feet wide, 40 feet long, and 8 feet high.

A spider is on one end wall, exactly half way between the side walls, and one foot above the floor. A fly is on the other end wall, exactly half way between the side walls, and one foot below the ceiling. The fly is asleep and stays where it is.

What is the <u>shortest</u> distance the spider can crawl to catch the fly (there isn't time to spin a web)?

Work your problem in the space provided below:

<u>HINT</u>: The room unfolded

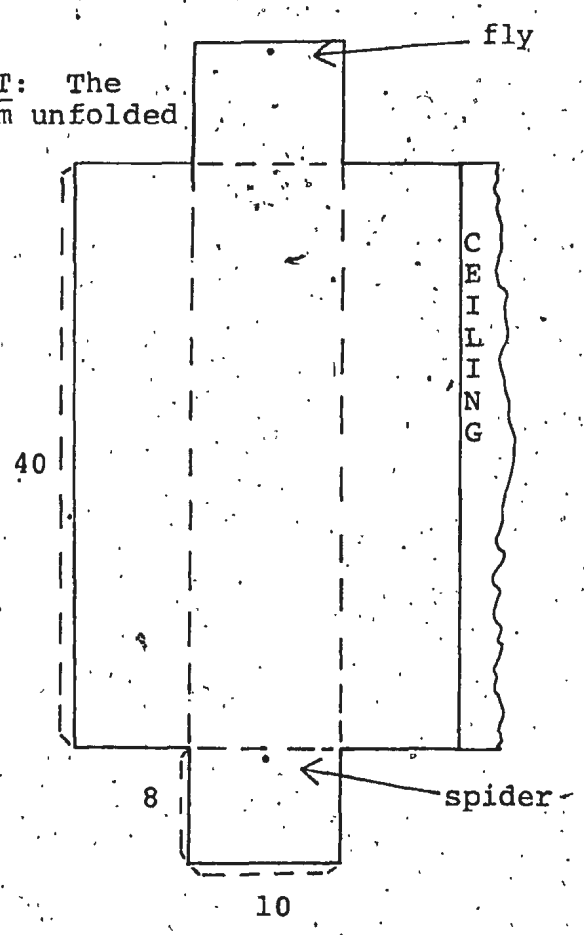

Place your answer in the following space ----------

Question 2

In a certain classroom, the teacher notes that when the attendance is 92% there are exactly seven empty seats, but when attendance is 88% there are exactly eight empty seats.

What is the total number of empty seats when attendance is 100%?

Work your problem in the space provided below:

92%	7
88%	8
100%	

Place your answer in the following space ----------

Question 3

If you were driving down U.S. Highway 171 and you were just leaving the town of T then you would be 6 miles from the town of L. When you get to the town of L, if you continue to drive in the same direction then you would be 3 miles from the town of P.

Continuing in the same direction as you were driving eventually you would arrive in the town of R. R is twice as far from T as it is from P.

How far is the town of R from the town of L?

Work your problem in the space provided below:

Place your answer in the following space ----------

Question 4

Each of five children (Joe, Sam, Sue, Jim, and Pam) chooses his favorite color.

Joe and Sam do not choose the same color; Sam and Sue do not choose the same color; Sue and Jim do not choose the same color; also Jim and Pam do not choose the same color.

What is the <u>smallest</u> number of different colors that chould be chosen?

Work your problem in the space provided below:

Joe (RED)

Sam (BLUE) Pam (WHITE)

Sue (RED) Jim (BLUE)

Place your answer in the following space ----------

Question 5

The circumference (distance around) of a circle is 24 and the length of a minor arc is 4.

What is the measure (in degrees) of the central angle formed by the two radii which intersect the circle to form the arc?

Work your problem in the space provided below:

Place your answer in the following space ----------

Question 6

Eleven boys stand in a circle. No two boys standing next to each other have on shirts of the same color. What is the minimum number of colors the eleven boys' shirts can be?

Work your problem in the space provided below:

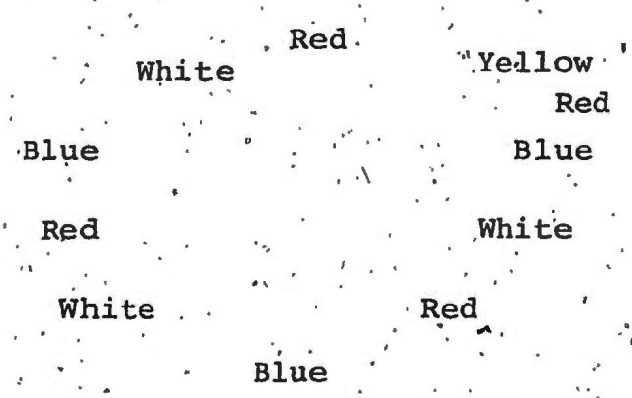

Place your answer in the following space ----------

Question 7

If the three points, whose coordinates are (-3, 2), (1, 5), (4, 1), are consecutive vertices of a square, what are the coordinates of the fourth vertex?

Work your problem in the space provided below:

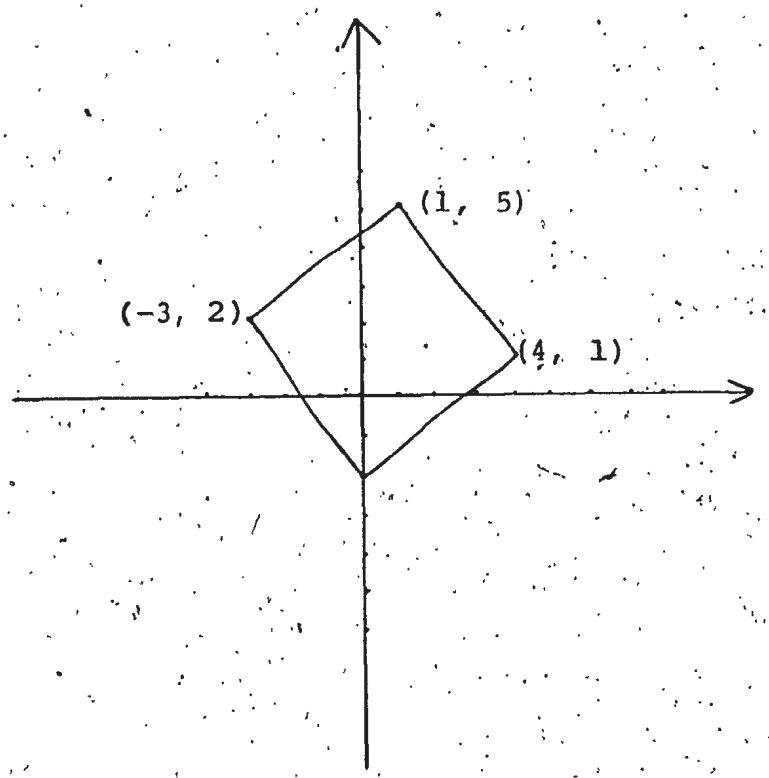

Place your answer in the following space ----------

Question 8

A man, resting against a telephone pole, casts a 4-foot shadow. If the telephone pole casts a 20-foot shadow, how high is it?

Work your problem in the space provided below:

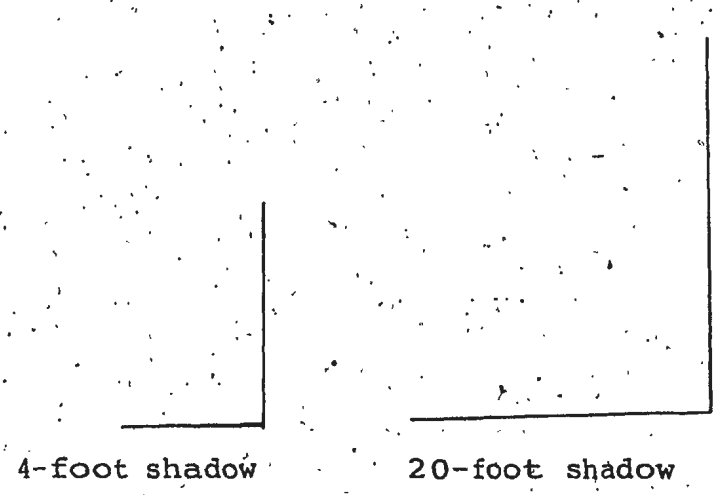

Place your answer in the following space ----------

Question 9

What geometric figure is formed when one connects the points (1, 2), (-2, 2), (-2, -4), (4, -4), (4, 2) and (1, 2)?

Work your problem in the space provided below:

Place your answer in the following space ----------

Question 10

S is a cardboard circular disc of radius R. How many circular cardboard discs of radius 1/2 R can be placed on S such that the smaller discs do not touch each other?

Work your problem in the space provided below:

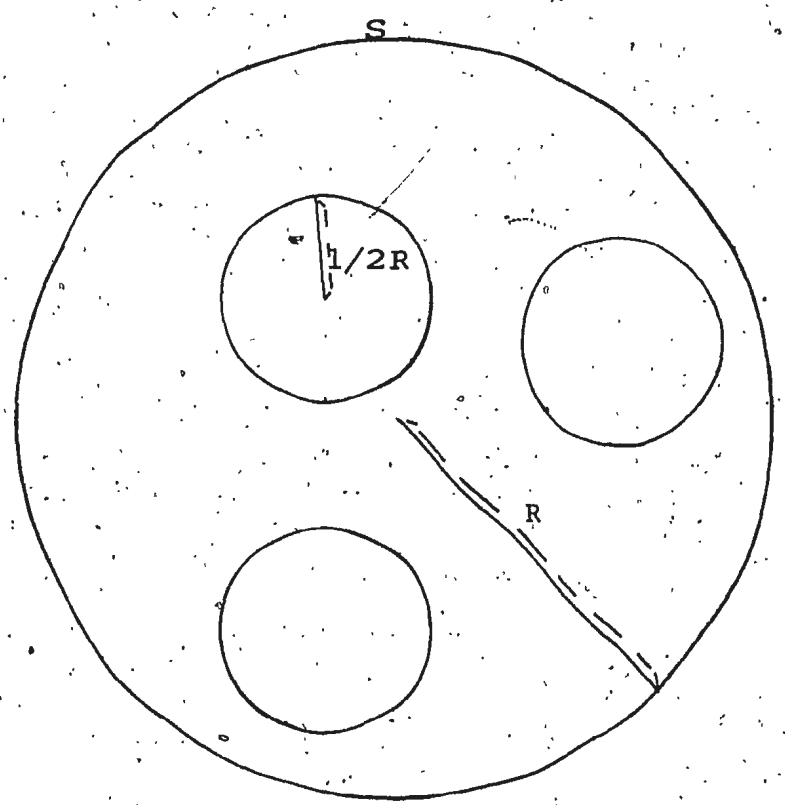

Place your answer in the following space ----------

Question 11

A coat, regularly priced at $50.00 was on sale for a 25% discount. After the sale the coat was marked up 30%. What does it now cost?

Work your problem in the space provided below:

Place your answer in the following space ----------

Question 12

A cardboard box (with no lid) is 3 feet long, 2 feet wide, and 1 foot deep. In the box are a couple of fleas, George and Lee. George is in the corner of the box where the side wall meets the end wall at the very top of the box. Lee is in the corner where the opposite side wall meets the opposite end wall and is at the bottom of the box.

What is the <u>shortest</u> path George can take to get to Lee always remaining in contact with the box?

Solve your problem in the space provided below:

<u>HINT</u>: The Box unfolded

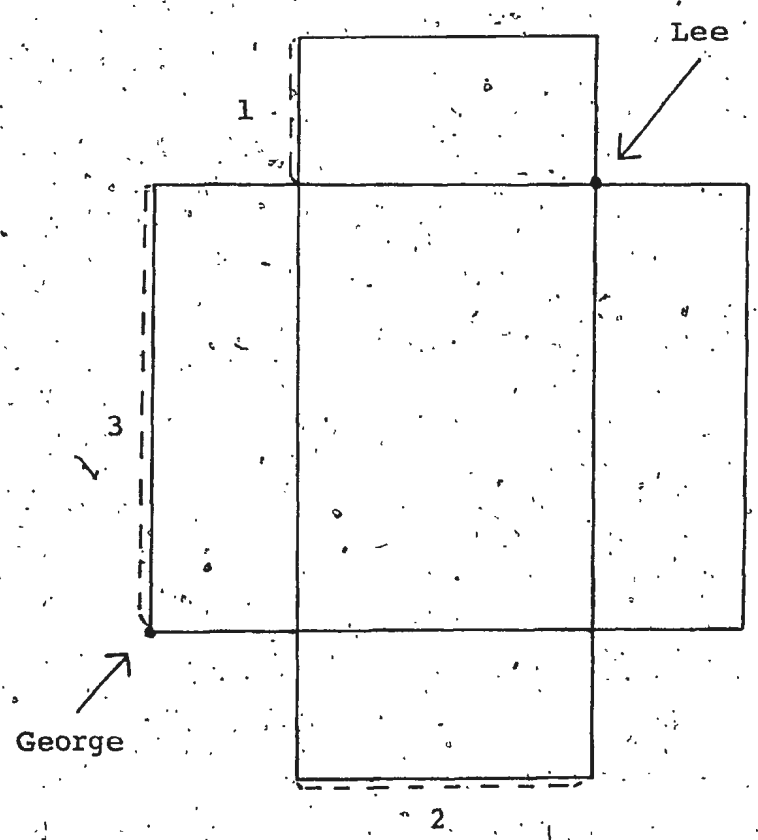

Place your answer in the following space ----------

Question 13

In 1964 the average salary of a skilled worker in the United States of America was $3,000.; in 1965, $3,400.; in 1966, $4,300.; in 1967, $5,000.; in 1968, $6,000.

In what year was there the greatest percentage increase in average salary?

Work your problem in the space provided below:

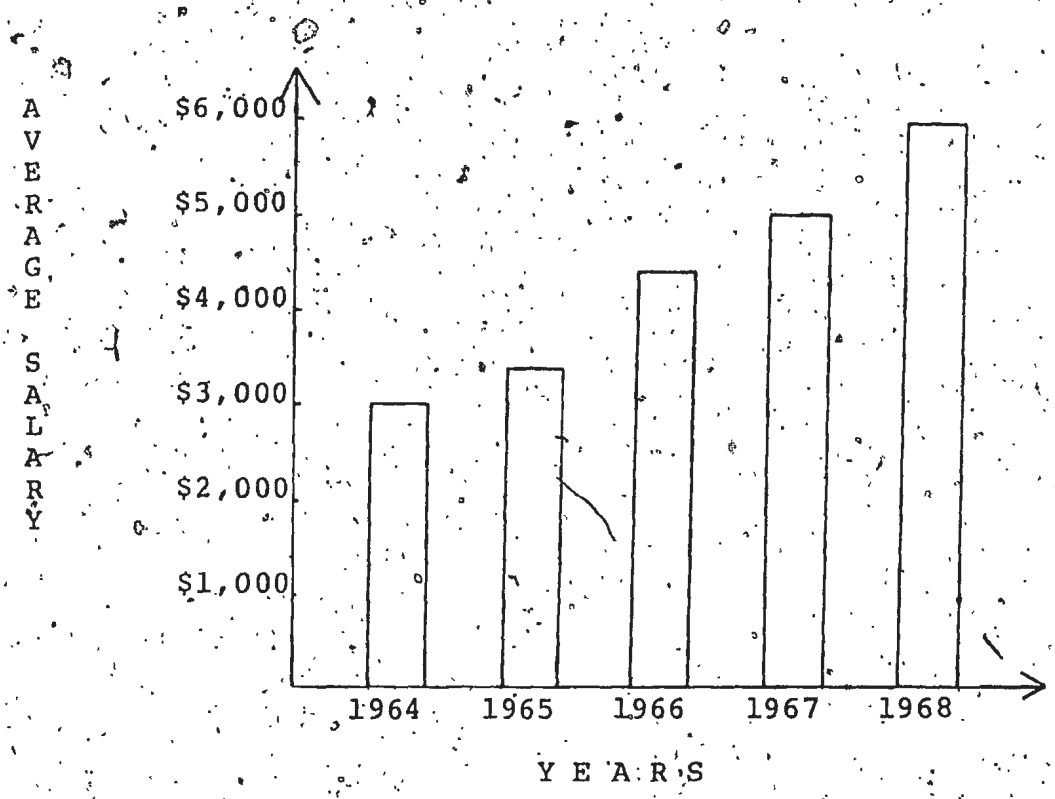

Place your answer in the following space ----------

Question 14

A farmer has a plot of land 20 feet by 15 feet. Let's call the plot of land ABCD such that AB is 20 feet, BC is 15 feet, CD is 20 feet, and AD is 15 feets.

There are three paths running through ABCD. The first path is AM where M is some point on BC; the second path is PQ where P is some point on AB and Q is some point on CD such that PQ is perpendicular to both AB and CD.

The last path is RS where R is some point on AD and S is some point on BC such that RS is perpendicular to both AD and BC.

If one walks down AM 10 feet one finds a point Z where all three paths intersect.

Given PZ is 6 feet find the <u>total</u> area in square feet of the two plots of land RDQZ and PBSZ.

Work your problem in the space provided below:

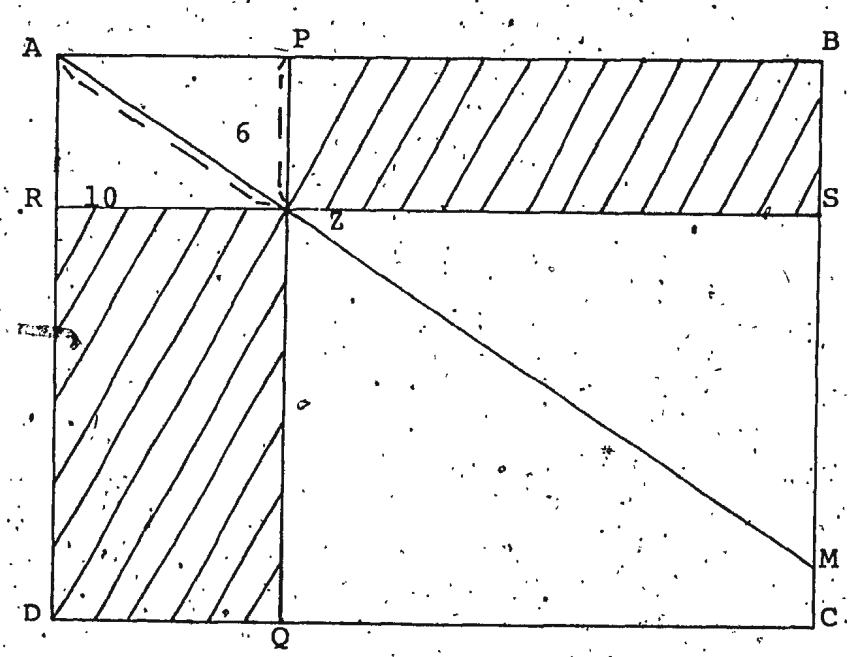

Place your answer in the following space ----------

Question 15

A rectangle has length 140 feet and width 3/7 of its length. What is the area of the inscribed circle of the rectangle. Give your answer in terms of (pi) .

Work your problem in the space provided below:

Place your answer in the following space ----------

Question 16

At what point will the graphs y=x+3 and y=2x+5 intersect?

Work your problem in the space provided below:

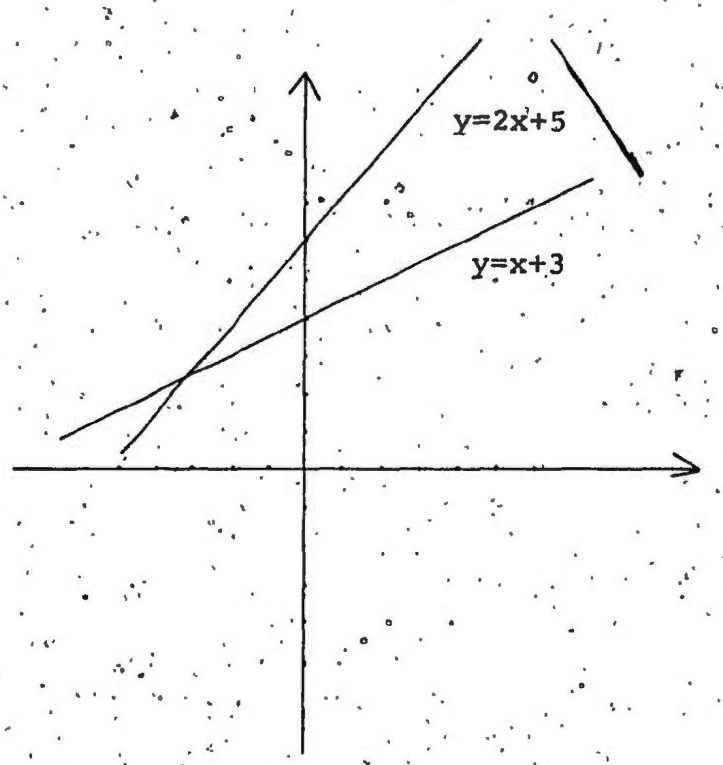

Place your answer in the following space ----------

Question 17

S is a square region with vertices (2, 5), (-4, -1), (8, -1), and (2, -7). T is a square region with vertices (0, 3), (6, 9), (6, -3) and (12, 3).

What is the area of the rectangular region formed by the intersection of S and T?

Work your problem in the space provided below:

Place your answer in the following space ----------

Question 18

What geometrical figure could contain <u>all</u> of the following points: (-3, 4), (3, 4), (-5, 0), (-3, -4), (5, 0), (3, -4), (0, 5), (0, -5)?

Work your problem in the space provided below:

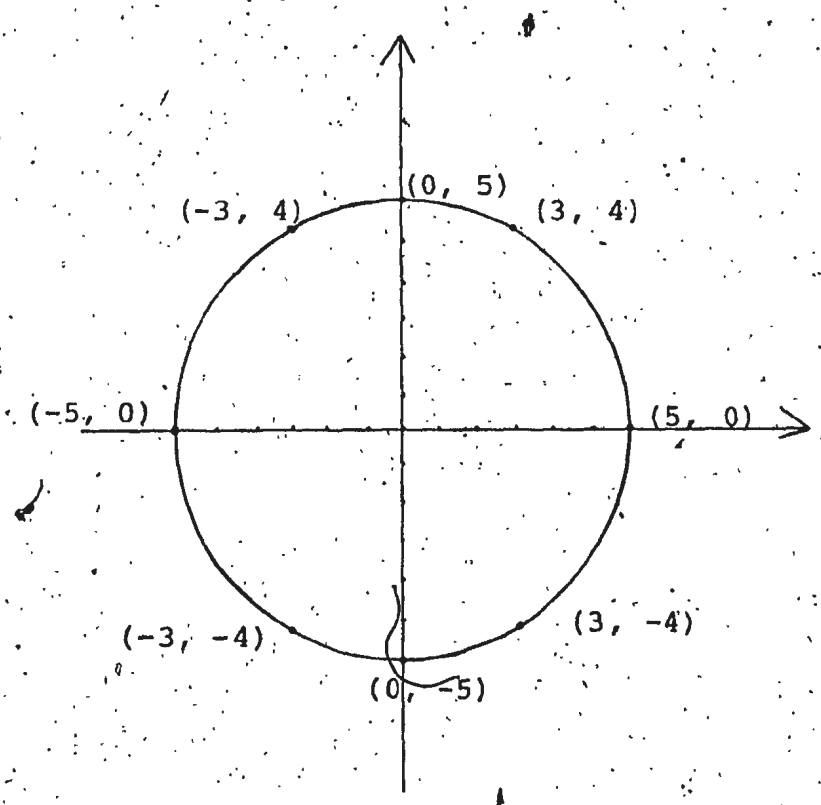

Place your answer in the following space ----------

Question 19

Square W, which has a side of length 4, circumscribes circle S. $\overline{AB}$ is the diameter of S such that A and B are points of intersection of S and W.

P is a point of intersection between S and W such that P does not belong to $\overline{AB}$.

What is the area of traingle APB?

Work your problem in the space provided below:

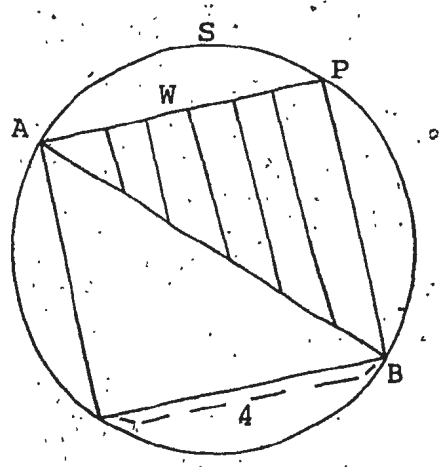

Place your answer in the following space ----------

Question 20

If circles S and T lie in the same plane and have no points in common, how many distinct lines are there which are tangent to both S and T?

Work your problem in the space provided below:

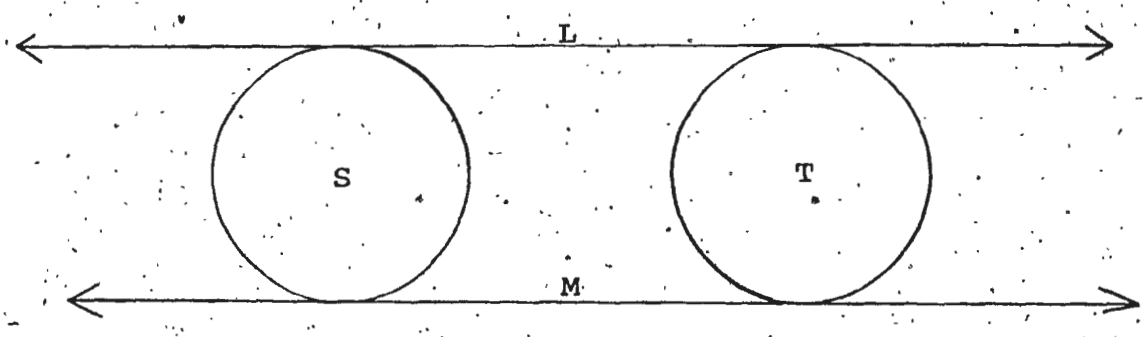

Place your answer in the following space ----------

Question 21

S is a square with vertices (1, 1), (1, 4), (4, 4), and (4, 1). The graph of the function $f(x)=2x+1$ intersects S in two points, one point is (1, 3), what is the other point?

Work your problem in the space provided below:

Place your answer in the following space ----------

APPENDIX C

Test III

Question 1

A rectangular room is 10 feet wide, 40 feet long, and 8 feet high.

A spider is on one end wall, exactly half way between the side walls, and one foot above the floor. A fly is on the other end wall, exactly half way between the side walls, and one foot below the ceiling. The fly is asleep and stays where it is.

What is the <u>shortest</u> distance the spider can crawl to catch the fly (there isn't time to spin a web)?

Work your problem in the space provided below:

<u>HINT</u>: The room unfolded

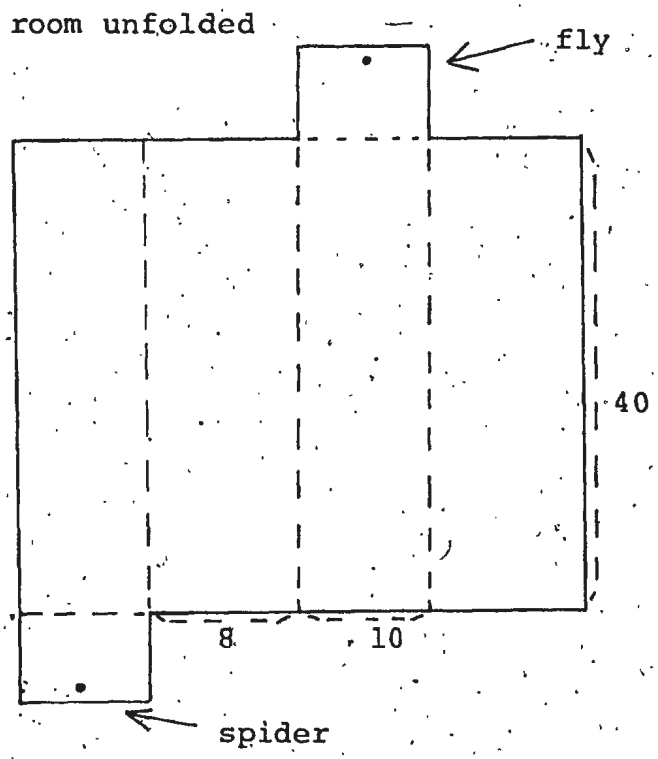

Place your answer in the following space ----------

Question 2

In a certain classroom, the teacher notes that when the attendance is 92% there are exactly seven empty seats, but when attendance is 88% there are eight empty seats.

What is the total number of empty seats when attendance is 100%?

Work your problem in the space provided below:

Place your answer in the following space ----------

Question 3

If you were driving down U.S. Highway 171 and you were just leaving the town of T then you would be six miles from the town of L. When you get to the town of L, if you continue to drive in the same direction then you would be three miles from the town of P.

Continuing in the same direction as you were driving, eventually you would arrive in the town of R. R is twice as far from T as it is from P.

How far is the town of R from the town of L?

Work your problem in the space provided below:

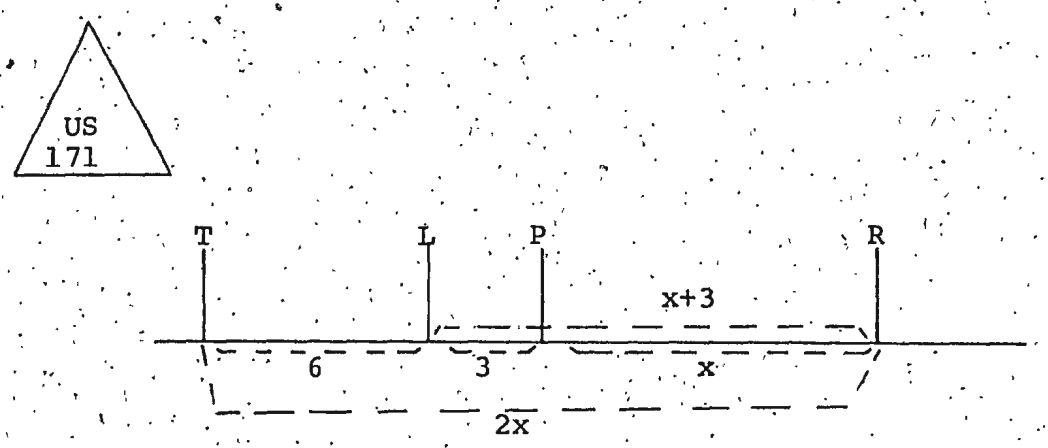

Place your answer in the following space ----------

Question 4

Each of five children (Joe, Sam, Sue, Jim and Pam) chooses his favorite color.

Joe and Sam do not choose the same color; Sam and Sue do not choose the same color; Sue and Jim do not choose the same color; also Jim and Pam do not choose the same color.

What is the smallest number of different colors that can be chosen?

Work your problem in the space provided below:

Place your answer in the following space ----------

Question 5

The circumference (distance around) of a circle is 24 and the length of a minor arc is 4.

What is the measure (in degrees) of the central angle formed by the two radii which intersect the circle to form the arc?

Work your problem in the space provided below:

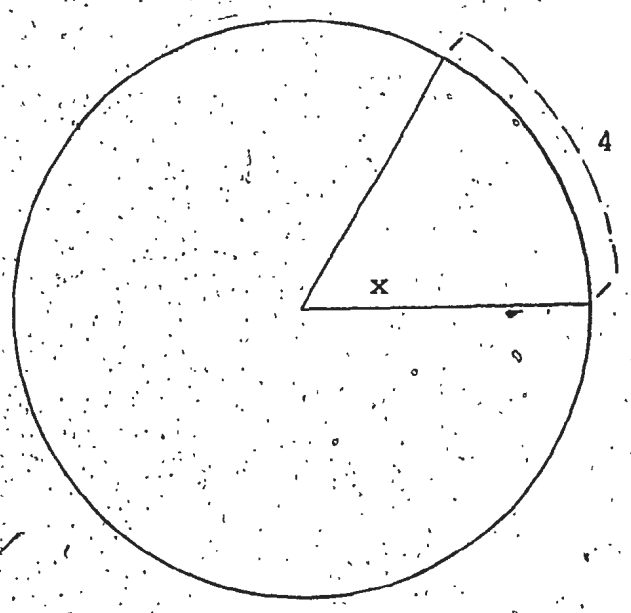

Place your answer in the following space ----------

Question 6

Eleven boys stand in a circle. No two boys standing next to each other have on shirts of the same color.

What is the minimum number of colors the eleven boys' shirts can be?

Work your problem in the space provided below:

Red

White

Blue

Blue

Red

Red

Blue

Blue

Red

Red

Blue

Place your answer in the following space ----------

Question 7

If the three points, whose coordinates are (-3, 2), (1, 5), (4, 1), are consecutive vertices of a square, what are the coordinates of the fourth vertex?

Work your problem in the space provided below:

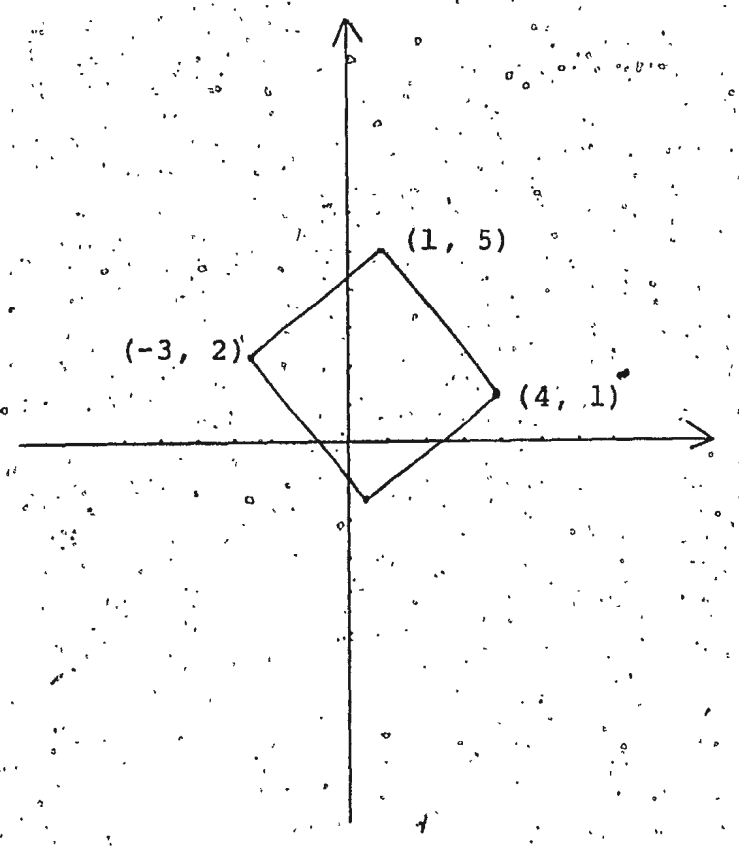

Place your answer in the following space ----------

Question 8

A man 6 feet tall, resting against a telephone pole, casts a 4-foot shadow. If the telephone pole casts a 20-foot shadow how high is it?

Work your problem in the space provided below:

Place your answer in the following space ----------

Question 9

What geometric figure is formed when one connects the points (1, 2), (-2, 2), (-2, -4), (4, -4), (4, 2) and (1, 2)?

Work your problem in the space provided below:

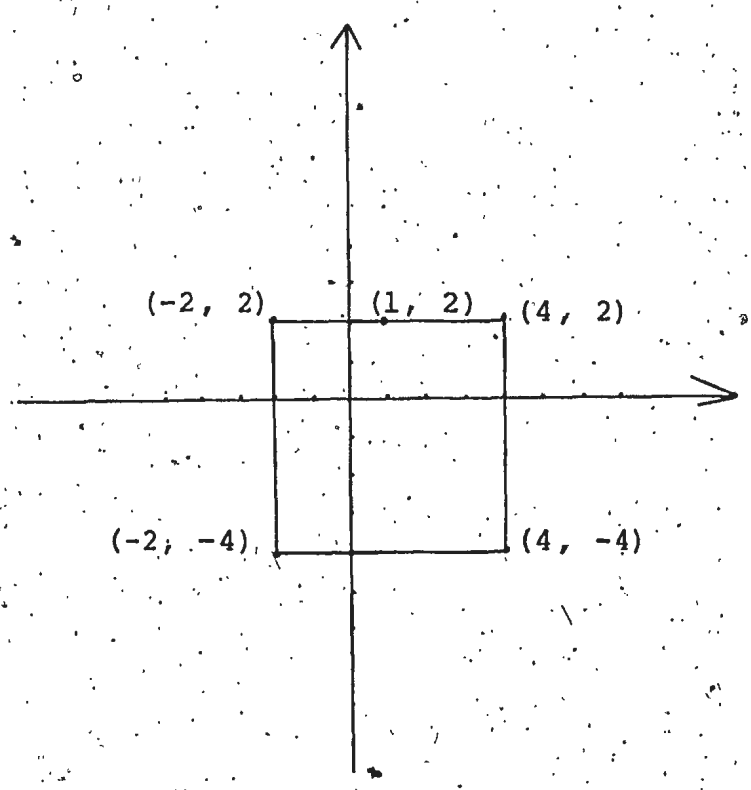

Place your answer in the following space ----------

Question 10

S is a cardboard circular disc of radius R. How many circular cardboard discs of radius 1/2 R can be placed on S such that the smaller discs do not touch each other?

Work your problem in the space provided below:

Place your answer in the following space ----------

Question 11

A coat, regularly priced at $50.00, is on sale for a 25% discount. After the sale the coat was marked up 30%. What does it now cost?

Work your problem in the space provided below:

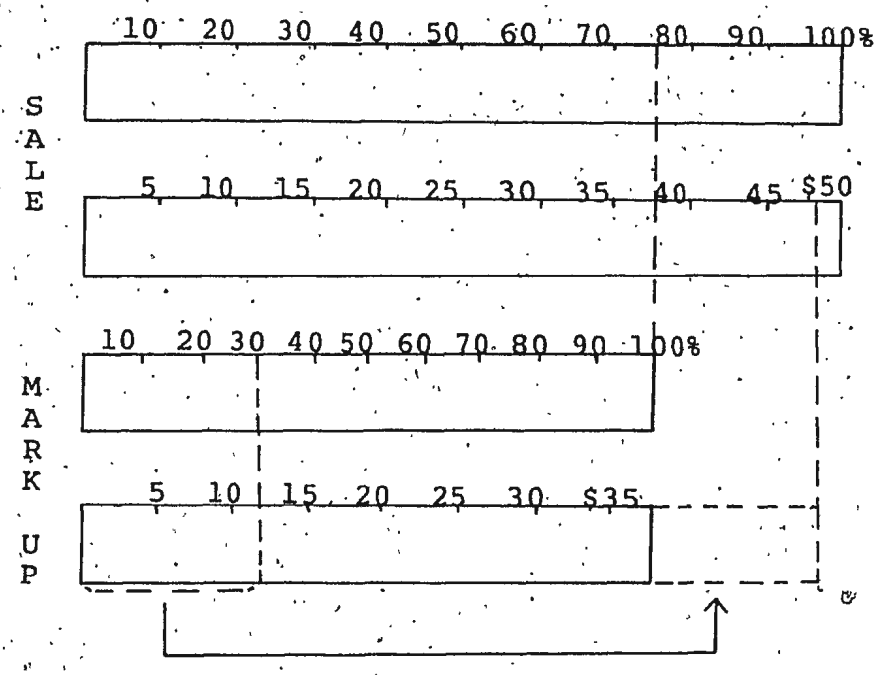

Place your answer in the following space ----------

Question 12

A cardboard box (with no lid) is 3 feet long, 2 feet wide, and 1 foot deep. In the box are a couple of fleas, George and Lee. George is in the corner of the box where th side wall meets the end wall at the very top of the box. Lee is in the corner where the opposite wall meets the opposite end wall and is at the very bottom of the box.

What is the <u>shortest</u> path George can take to get to Lee always remaining in contact with the box?

Work your problem in the space provided below:

<u>HINT</u>: The box unfolded

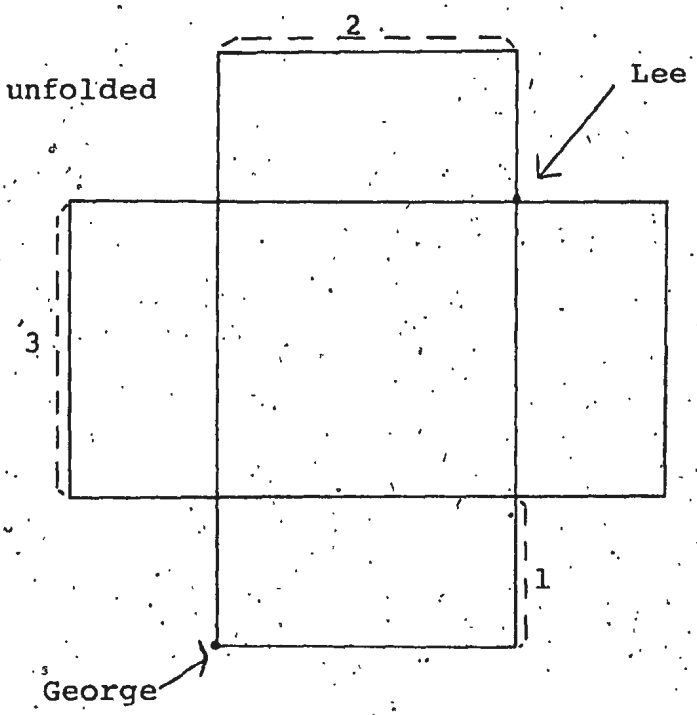

Place your answer in the following space ----------

Question 13

In 1964 the average salary of a skilled worker in the United States was $3000.; in 1965, $3,400.; in 1966, $4,300.; in 1967, $5,000.; in 1968, $6,000.

In what year was there the greatest percentage increase in average salary?

Work your problem in the space provided below:

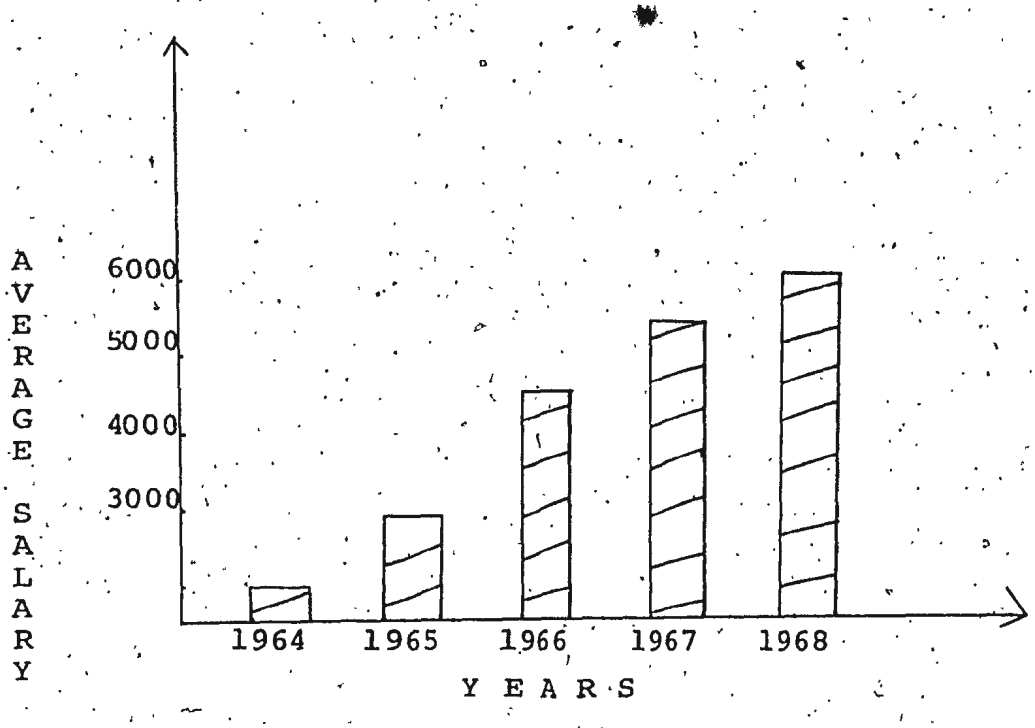

Place your answer in the following space ----------

Question 14

A farmer has a plot of land 20 feet by 15 feet. Let's call the plot of land ABCD such that AB is 20 feet, BC is 15 feet, CD is 20 feet, and AD is 15 feet.

There are three paths running through ABCD. The first path is $\overline{AM}$ where M is some point of $\overline{BC}$; the second path is $\overline{PQ}$ where P is some point of $\overline{AB}$ and Q is some point of $\overline{CD}$ such that $\overline{PQ}$ is perpendicular to both $\overline{AB}$ and $\overline{CD}$.

The last path is $\overline{RS}$ where R is some point on $\overline{AD}$ and S is some point of $\overline{BC}$ such that $\overline{RS}$ is perpendicular to both $\overline{AD}$ and $\overline{BC}$.

If one walks down $\overline{AM}$ 10 feet one finds a point Z where all three paths intersect.

Given PZ is 6 feet find the <u>total</u> area in square feet of the two plots of land RDQZ and PBSZ.

Work your problem in the space provided below:

Place your answer in the following space ----------

Question 15

A rectangle has length 140 feet and width 3/7 of its length. What is the area of the inscribed circle of the rectangle? Give your answer in terms of (pi)

Work your problem in the space provided below:

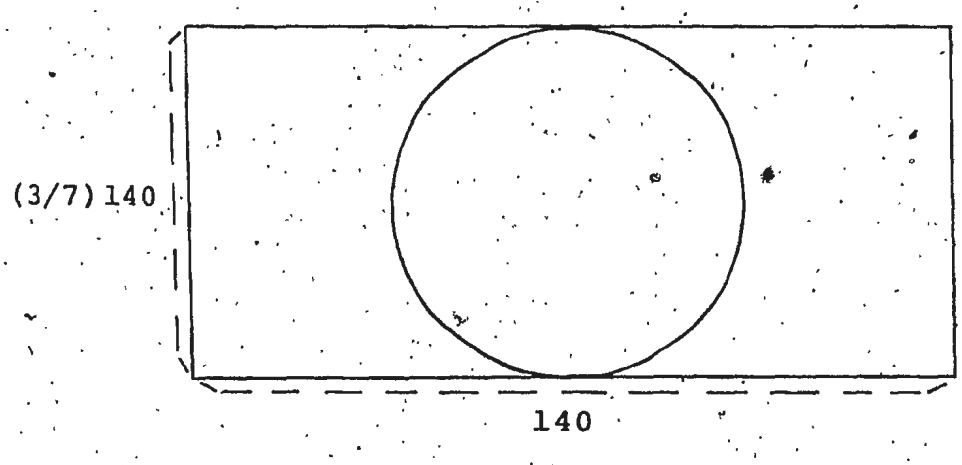

Place your answer in the following space ----------

Question 16

At what point will the graphs $y=x+3$ and $y=2x+5$ intersect?

Work your problem in the space provided below:

Place your answer in the following space ----------

Question 17

S is a square region with vertices (2, 5), (-4, -1), (8, -1) and (2, -7). T is a square region with vertices (0, 3), (6, 9), (6, -3), and (12, 3).

What is the area of the rectangular region formed by the intersection of S and T?

Work your problem in the space provided below:

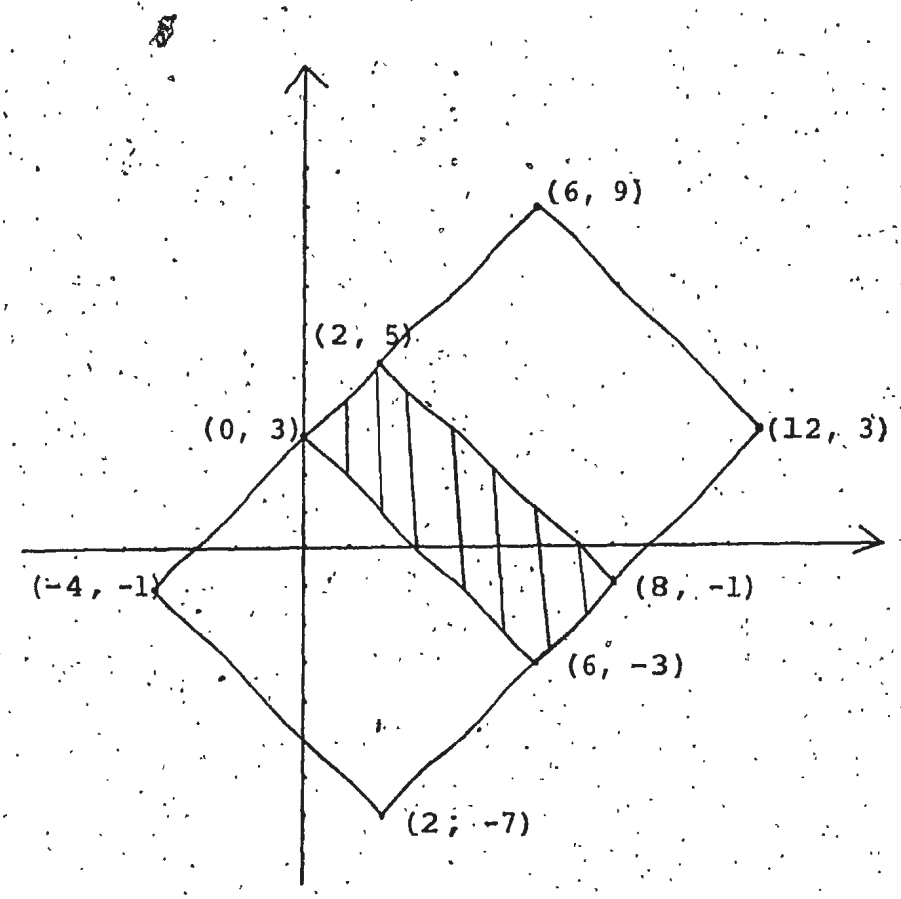

Place your answer in the following space ----------

Question 18

What geometrical figure could contain <u>all</u> of the following points: (-3, 4), (3, 4), (-5, 0), (-3, -4), (0, 5), (0, -5)?

Work your problem in the space provided below:

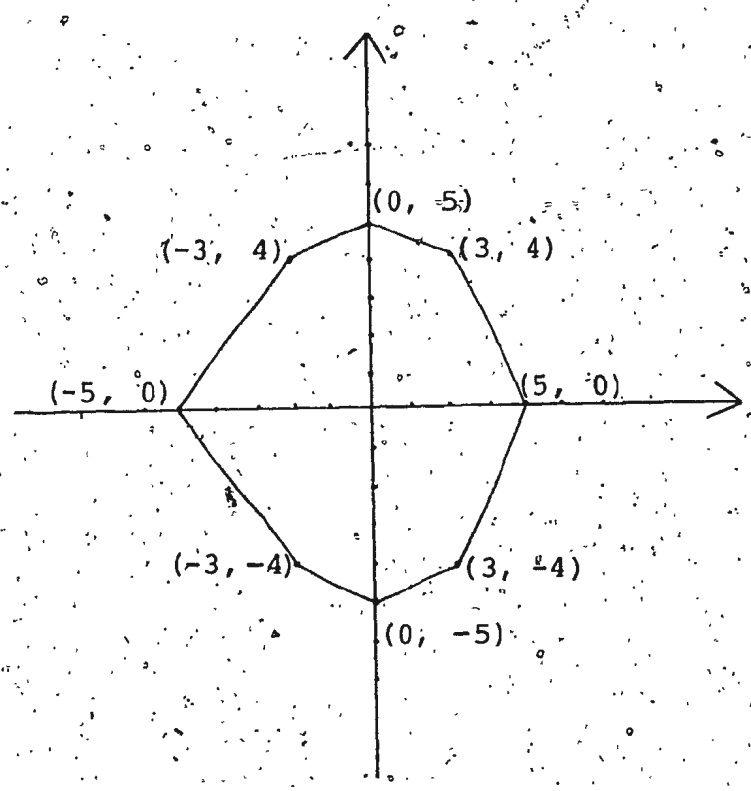

Place your answer in the following space ----------

Question 19

Square W, which has a side of length 4, circumscribes circle S. $\overline{AB}$ is the diameter of S such that A and B are points of intersection of S and W.

P is a point of intersection between S and W such that P does not belong to $\overline{AB}$.

What is the area of triangle APB?

Work your problem in the space provided below:

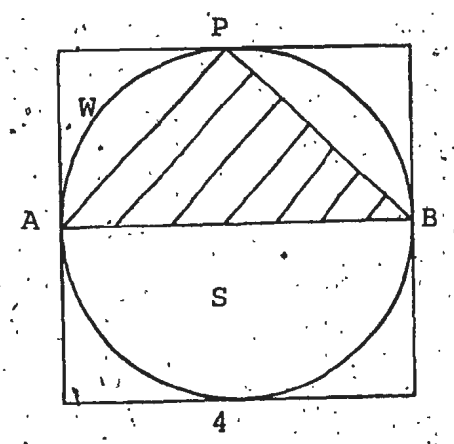

Place your answer in the following space ----------

Question 20

If circles S and T lie in the same place and have no point in common, how many distinct lines are there which are tanget to both S and T?

Work your problem in the space provided below:

Place your answer in the following space ----------

Question 21

S is a square with vertices (1, 1), (1, 4), (4, 4), and (4, 1). The graph of the function f(x)=2x+1 intersects S in two points, one point is (1, 3), what is the other point?

Work your problem in the space provided below:

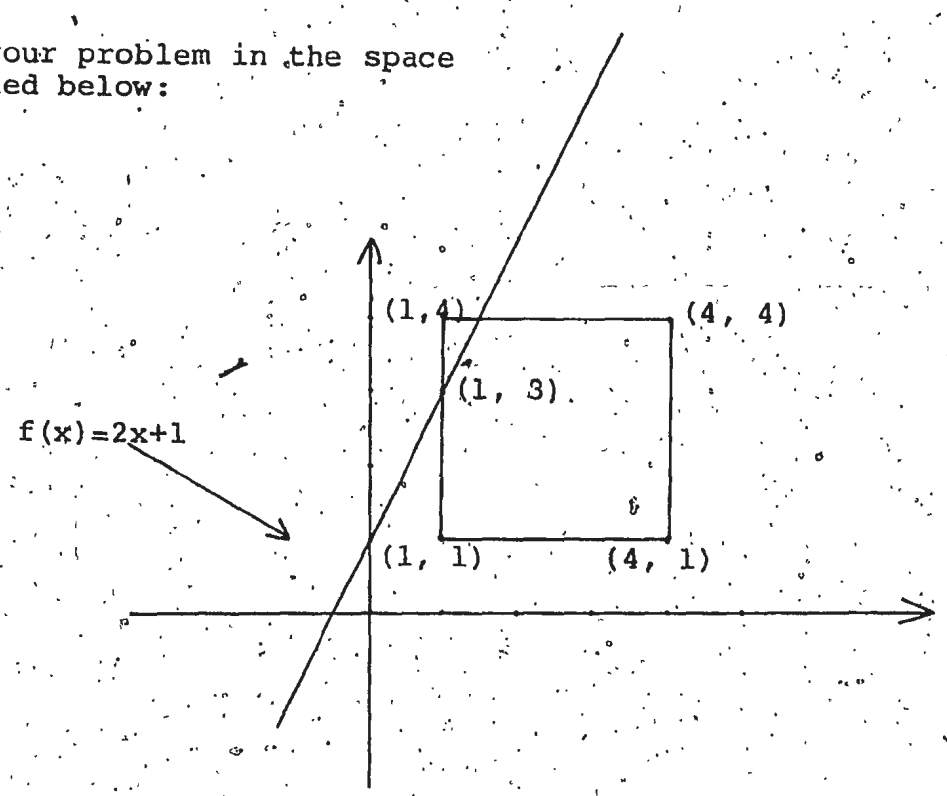

Place your answer in the following space ----------

APPENDIX D

Correct responses to test items

Item	Correct response
1	48 feet
2	5
3	12 miles
4	2
5	60
6	3
7	(0, -2)
8	30 feet
9	square
10	1
11	$48.75
12	$3\sqrt{2}$ or $\sqrt{18}$
13	1966
14	144
15	900
16	(-2, 1)
17	24
18	circle or octagon or polygon
19	4
20	4
21	(1 1/2, 4) or (3/2, 4)

APPENDIX E

Correspondence

March 18, 1975

Dear sir:

My name is Margaret Spurrell. I am presently enrolled in a graduate program at Memorial University leading to the degree M.Ed. (Curriculum and Instruction). Prior to this year, I taught mathematics to students in grades eight, nine and ten for eight years. During that time one of the biggest concerns my fellow mathematics teachers and I often discussed, centered around trying to find ways to help students learn how to solve word problems. I feel sure that this is a problem that also concerns you and your mathematics teachers. It is because of this interest and concern that I would like to investigate a small part of this large problem as a thesis study. As you know, the success of any research project dealing with teaching and learning depends primarily upon the degree of co-operation of teachers and principals who share a deep concern for educational improvement. The design of the present study requires the co-operation of eleven high schools around the province. I shall greatly appreciate it if you will grant me permission to include your school in the study.

It is not possible to discuss the study in detail at this time. I am sure you realize that the results of the study could be unfairly influenced by such discussion.

However, I shall be happy to discuss details with you immediately before beginning the study. In that way you would have the opportunity to give me your final approval. I shall also be happy to share with you the final results of the study so that you and your teachers may share any benefits the study may reveal.

It is very important that all schools that agree to participate in this study receive and follow the same instructions. Because of this, I have included a list of instructions that I would ask you and your teachers to follow very closely should you become a part of this study. I would like to further take this opportunity to point out that the actual student time required is only approximately two hours.

I do hope that you want your school to be a part of this study. I shall greatly appreciate your careful consideration in this matter.

If you are willing to help, please detach the form below and mail it to me in the envelope provided.

Thank you for reading my letter.

Yours very truly,

Margaret Spurrell

My school ---------- will serve
(name of school)
as part of the sample for this study.

(signature of principal)

INSTRUCTIONS TO PARTICIPATING SCHOOLS

It is very important that all schools that agree to become a part of this study follow the instructions below very carefully. If you have difficulty with the instructions I ask you to contact me and I shall be happy to clarify your problem.

(1) Your school through the co-operation of your mathematics teachers is asked to select for this study a maximum of 30 students presently enrolled in a grade ten mathematics program approved by the Newfoundland Department of Education. You are asked to select these 30 students on the following basis: ten (fewer if your school cannot provide ten) "good" problem solvers; ten (fewer if your school cannot provide ten) "average" problem solvers; and ten (fewer is your school cannot provide ten) "poor" problem solvers. You are asked to make this selection using the definitions of "good", "average" and "poor" provided in the following pages.

"Good", "average" and "poor" are relative terms and often lead to subjective selection. This study shall attempt to reduce this by asking you to adhere to the following two things:

(a) You are asked that at least two teachers who are presently teaching your grade ten students, mathematics, or who taught these students, mathematics in grade nine, agree upon the selections made to fill each of the three categories.

(b) Teachers are asked to select students upon the basis of the following definitions: (They are not asked to agree with these definitions but to make their selection upon them for the purpose of reducing subjectivity of selection).

A "good" problem solver is a student who can solve 70-100% of the word problems that require solution in his present mathematics texts without seeking assistance from his classmates or teachers. He is one who shows confidence in his ability to arrive at a correct solution and will attempt alternative methods of solution when a present method fails.

An "average" problem solver is a student who can solve 30-70% of the word problems that require solution in his present mathematics texts without seeking assistance from his classmates or teachers. He is one who usually seeks verification that his solutions are correct and when his first or second attempt fails to yield a correct solution he will no longer work on his own but will seek assistance from his classmates or his teachers.

A "poor" problem solver is a student who can solve 0-30% of the word problems that require solution in his present mathematics texts without seeking assistance from his classmates or teachers. He is one who has very little confidence in the correctness of his solutions as shown by the fact that he can easily be convinced a correct solution is false. He usually needs assistance before he can begin a problem and gives up in despair when his first attempt does not yield a correct solution.

This pupil selection by teachers will have to be completed before I visit your school. I will give you a one week notification, either by letter or telephone, prior to my visit which should take place in late April or May.

(2) If you become a part of this study, I shall, with your permission, visit your school to conduct the major part of the study. It will require that you provide for me some room with thirty desks where I can test the selected students. This test will run for one to two hours (an afternoon session). This will, of course, mean that the selected students will miss their regularly scheduled work for that afternoon session.

Thank you.

April 10, 1975

Dear sir:

Thank you for agreeing to have your school serve as part of the sample for the study I described to you in my letter of March 18, 1975.

I plan to visit your school on the afternoon of . . . . . .

If this time is not agreeable to you and your teachers please call me collect at 536-2477.

Thank you.

Yours very truly,

Margaret Spurrell

APPENDIX F

Instructions read to students

Hello everyone. We are now ready to begin. Please pay careful attention to the instructions I am now going to read to you.

First, I want to say thank you to you and your teachers for allowing me to come into your school and work with you this afternoon.

It is important that I give all students who are a part of this study the same instructions. Therefore, it was necessary for me to write down these instructions and to read them to you as I am doing now. I must ask you to save any questions you may have concerning the purpose of this study and why you are a part of it until after the end of the test. You may feel free to question me at the end of the test.

You may have a maximum of all afternoon (about two hours) to finish the test. You are asked to take as much time as you find necessary. If you finish before the two hours, you may pass in your paper and go back to your regular classroom activities. You are asked to work totally on your own...No conversation.... There are three different forms of this test. The person sitting next to you may have a different form than you have. You are on your own.

During the test if you have a question you may raise your hand and ask me about it. I may not be able to answer your question other than to tell you if something is a

typing error or if it is in the intended form. But you may still ask me if something is bothering you. I'll help you if I may. Before you begin will you please make sure you have any pens, pencils, rulers or erasers you may need. You may use your mathematical instruments in the test if you wish to do so.

I have your names written on the tests so will you raise your hand when I call your name. Do not open the test until you are told to do so.

(Tests distributed)

Open your test to question 1. You will find below the question a space where you will work your problem. If you find this space is too small, continue on the back of the sheet. On the bottom of each page you will find an answer space. It is very important that you place your answer in this answer space as only answers that are in these answer spaces will be corrected.

You may begin the test now.