A HEURISTIC METHOD OF EQUIPMENT ACQUISITIONS FOR MAXIMUM PROFIT

CENTRE FOR NEWFOUNDLAND STUDIES

TOTAL OF 10 PAGES ONLY
MAY BE XEROXED

(Without Author's Permission)

R. S. BUTLER

312438

CENTRE FOR NFLD. STUDIES
NOV 15 1972
MEMORIAL UNIVERSITY
OF NEWFOUNDLAND

A HEURISTIC METHOD

OF

EQUIPMENT ACQUISITIONS

FOR MAXIMUM PROFIT

THESIS

PRESENTED TO THE FACULTY OF GRADUATE STUDIES

OF MEMORIAL UNIVERSITY OF NEWFOUNDLAND IN PARTIAL

FULFILLMENT OF THE REQUIREMENT FOR THE DEGREE OF

MASTER OF ENGINEERING

by

© R.S. Butler

MEMORIAL UNIVERSITY OF NEWFOUNDLAND

OCTOBER 1971

REV. JAN. '72

TABLE OF CONTENTS

List of Tables ..... (iii)

List of Figures ..... (iv)

Preface ..... (v)

Abstract ..... (vi)

CHAPTER

I Introduction

Introduction to the Problem Area 1

Lack in the Environment 3

Variables & Constraints Affecting Total Costs 7

Present State of the Art 11

II Problem Statement 13

Initial Problem Statement 14

Preamble to Inputs 14

Inputs 15

Outputs 23

System Identification 27

III Theoretical Method of Solution 28

Explanation of Summary Flow Charts 30

Logic and Rules of Application 35

Symbols 36

Mathematical Formulae 38

Summary 71

IV Example 72

Explanation of i = 1 level 77

Explanation of i = 2 level 84

Explanation of i = 3 level 92

Explanation of i = 4 level 99

Summary 108

V Conclusions 112

Appendix A - Sequencing Projects 116

Appendix B - Sensitivity Analysis 118

Bibliography 122

List of Tables

Table 4-1 Resource Allocation Data 75

Table 4-2 Input Data Table 76

Table 4-3 Resource Data i = 1 77

Table 4-4 Summation of Calculations i = 1 82

Table 4-5 Summary of Cost i = 1 83

Table 4-6 Resource Data i = 2 84

Table 4-7 Summation of Calculations i = 2 89

Table 4-8 Summary of Costs i = 2 91

Table 4-9 Resource Data i = 3 92

Table 4-10 Summation of Calculations i = 3 96

Table 4-11 Summary of Cost i = 3 98

Table 4-12 Resource Data i = 4 99

Table 4-13 Summation of Calculation i = 4 103

Table 4-14 Summary of Cost i = 4 104

List of Tables (Cont'd)

Table 4-15	Summary of Costs and Project Duration	105
Table 4-16	Resource - Optimum Level, Number and Mode of Acquisition	109
Table 4-17	Table of Idle Times	110
Table B-1	Acquisition Cost by Single Mode Method	118
Table B-2	Cost Due to Sensitivity of L_j	119
Table B-3	Model Benefit	121

List of Figures

Fig 1-1	Profitability - Need of Resources	2
Fig 1-2	Cost - Time Element Curve	6
Fig 2-1	Input-System - Output Diagram	26
Fig 3-1	Summary Flow Chart	34
Fig 3-1A	Values of Theta	39A
Fig 3-2	Detail Flow Chart	45
Fig 4-1	Network Diagram	74
Fig 4-2	Time Resource Usage Table i = 1 ...	80
Fig 4-3	Time Resource Usage Table i = 2 ...	87
Fig 4-4	Time Resource Usage Table i = 3 ...	94
Fig 4-5	Time Resource Usage Table i = 4 ...	101
Fig 4-6	Project Cost vs Time Element (Actual)	107
Fig A-1	Time Resource Usage and Available Table	117

PREFACE

Project Management provides an excellent opportunity to optimize the use of all resources to be applied to a project. This thesis proposes a methodology by which resource acquisition is linked with resource allocation to provide optimum job profits.

The thesis is made up of five basic parts, namely,

Chapter I - An introduction to the problem area and a discussion of the need for an efficient methodology to the problem of resource acquisition.

Chapter II - Inputs and outputs associated with the methodology.

Chapter III - The mathematical formulae and the detailed flow charts for the proposed methodology.

Chapter IV - A worked example of a project.

Chapter V - Conclusions

I must express my gratitude to Professor H.N. Ahuja, who, first of all, introduced me to the potential of such a programme, and who provided many an unscheduled hour of instruction and guidance. I am also indebted to my partners in private business, who tolerated my many hours of absence from the office, and, most important, to my wife and family who tolerated my many hours of absence from home, and for their patience and encouragement.

R.S. Butler

The thesis also contains a discussion of how the integration of the acquisition algorithm with the CPM and resource allocation programs has been achieved. The whole constitutes a complete package for scheduling construction project activities, determining the equipment required and specifying the mode of acquisition in a multi-resource and sequential multi-project environment.

ABSTRACT

EQUIPMENT ACQUISITION FOR MAXIMUM PROFIT

Many large construction projects are planned utilizing the critical path method (CPM). Resource allocation is carried out to determine the resources required on such projects and leveling of resources is performed to minimize fluctuations in demand. No attempt is made to check for economic and financial feasibility of the equipment acquisition in conjunction with the allocation procedure. The mode of acquisition is determined by purchasing personnel independently of the total cost of the project. The result is sub-optimization.

The subject of this thesis is the heuristic method which has been developed to integrate the mode of equipment acquisition with the resource allocation on a project planned on the critical path method.

There are twenty one input variables covering, physical, economic and financial feasibility to the algorithm. In the algorithm, several project durations are generated based on different levels of resource allocation. The cost associated with each project duration is determined. These costs are compared and a selection made which provides the minimum cost to complete the project.

CHAPTER I

INTRODUCTION

Introduction to the Problem Area

The increased pace and complexity of modern day construction has placed increased emphasis on planning, monitoring and communication of pertinent information to management.

Construction projects are increasing in size and monetary value. The need to obtain optimum use of men, machines and materials has become to mean the difference between survival and non-survival of virtually any group of firms or of individual firms.

The number of business failures in 1970 and related financial liabilities[1] is a record high; national and international business competition is increasing annually; financial involvements become larger and larger, and the cost of financing increases steadily. The sometimes inadequate application of fixed and working capital and its ultimate effects has had a strong influence on the number of business failures in the past.

[1] Statistics Canada - Catalogue 61-002 Second Quarter 1971 (Ref. 28 of Bibliography)

The cost of money has increased to the point where month to month cash flow requirements are sometimes mandatory in order to prevent a block of money being committed for an unwarranted or unnecessary length of time, and thereby not utilizing that resource to its ultimate. Financial institutions are more frequently demanding that the use of money be geared directly to its ultimate application and, therefore, be optimized.

All construction projects utilize labour, materials and equipment. The capital cost of construction equipment can be a substantial part of a heavy construction industry project and the alternatives available to capital investment need be considered.

FIG. I-I

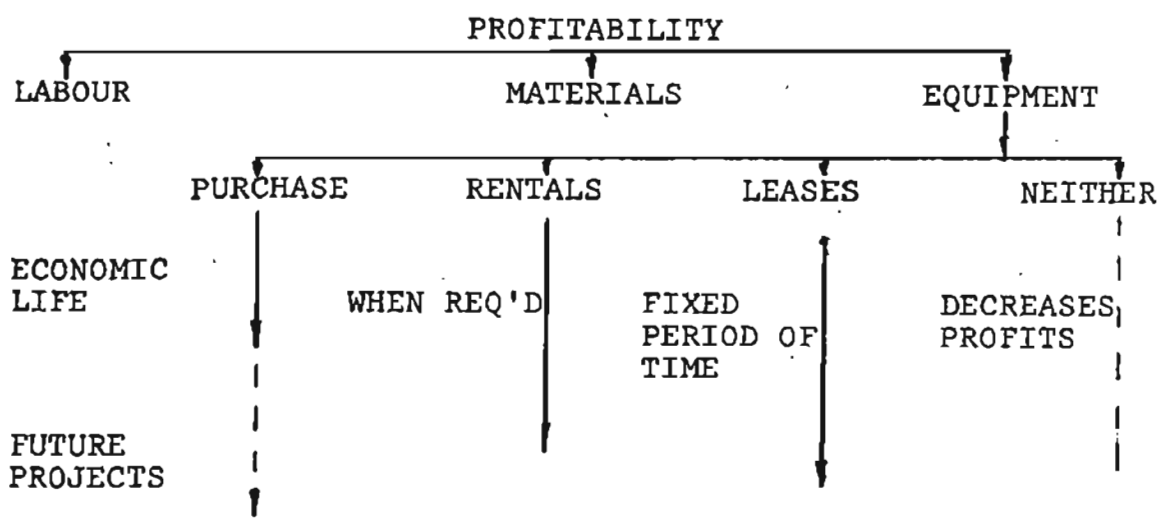

Fig. I-I graphically shows that profitability depends partially on the proven need for equipment and thereupon the method of acquiring that equipment. Equipment can be purchased for the

project in question with provision for future projects, or equipment can be rented when required, or equipment can be leased for a fixed period other than the project duration or alternatively, equipment may not be acquired without decreasing job profits.

This sphere of construction equipment acquisition is the area which is the basis for this thesis.

A relationship is required between the acquisition alternatives of purchase, rental and lease of equipment, considering factors of dollar value, operational costs, maintenance, and their effect on the variables of total project completion times and total project costs.

Lack in the Environment

"Resources are never unlimited, and often they are sorely restricted. This is true in projects of any size, whether private, corporate or national in scope. Our understandings depend on our available resource capacity, and the success of a venture depends on how we use our resources. For that reason, it is vital that we do not fritter away our resources. It is equally vital that we do use scheduled resources to their capacity. The optimum allocation of resources to any project not only lowers the total cost of the project in question, but it often frees resources for projects we might not otherwise have undertaken".[2]

[2] R.L. Martino - Project Management and Control: Allocating and Scheduling Resources - Vol. III - 1965. Ref. 20 of Bibliography.

Present systems of CPM scheduling and resource allocation are based on one of three possible arrangements. The first is that the number of resources to be used is fixed and from this the project duration is determined. The second method is basically the reverse of the first method, whereby the project duration is fixed and the number of resources required to meet the duration is determined. The third method achieves leveling of resources by rescheduling the activities. However, once again no means is provided to determine the economic effects on the project of how resources are acquired, in relation to other job costs and total project costs. Optimum use of resources does not mean optimum job profits. Job profits depend partially on the correct determination of the need for additional resources and then the correct determination of the method of acquisition that will provide optimum profits.

It may not be within the financial means of the organization to obtain additional resources on a particular project, but current resource leveling procedures assume that the additional resource can be obtained. This assumption is unrealistic.

Present resource allocation programmes, such as MAP, RAMP, RAP, REAL, REALL* determine the equipment required on a project.

*MAP - R.L. Martino - Ref. 20 of Bibliography
RAMP - J.J. O'Brien - Ref. 24 of Bibliography
RAP - PMS (IV) of Resource Allocation Processor
IBM Program Number 5734-XP4 - Ref. 15 of Bibliography
REAL - PCS Resource Allocation REAL/360 IBM Program Number 5736-XP2.
REALL - H.N. Ahuja - Memorial University of Newfoundland
Ref. 2 of Bibliography

They ensure the physical feasibility of a project assuming that the resources required are available. They do not check for the economic and financial feasibility of obtaining the equipment. The mode of acquisition is decided by the purchasing personnel considering the economic factors for the equipment independently and not in relation to the resulting total cost of a project. The mode of acquisition is not considered in relationship to other project cost and, therefore, cannot portray its effects on the total project costs. The result of these procedures is, therefore, sub-optimization*.

Present methods of resource acquisition achieve minimum cost for acquisition but not necessarily minimum project costs. Resource allocation and acquisition of equipment need to be integrated and geared to the organization's main objective, which is maximum profitability. There is no such procedure in use today which is known to the author.

The economic problems or factors that each of these alternatives of purchase, rent or lease present and their effects on the direct costs of an activity, and on the overall project cost, must be investigated before a decision is made as to which alternative should be utilized. The combined effects of all applicable economic factors can be shown diagramatically in Fig. #1-2 below.

* See Appendix A for example.

FIG. 1–2
PROJECT COST
(VIA MEANS OF RESOURCE AQUISITION)
VS
TIME ELEMENT

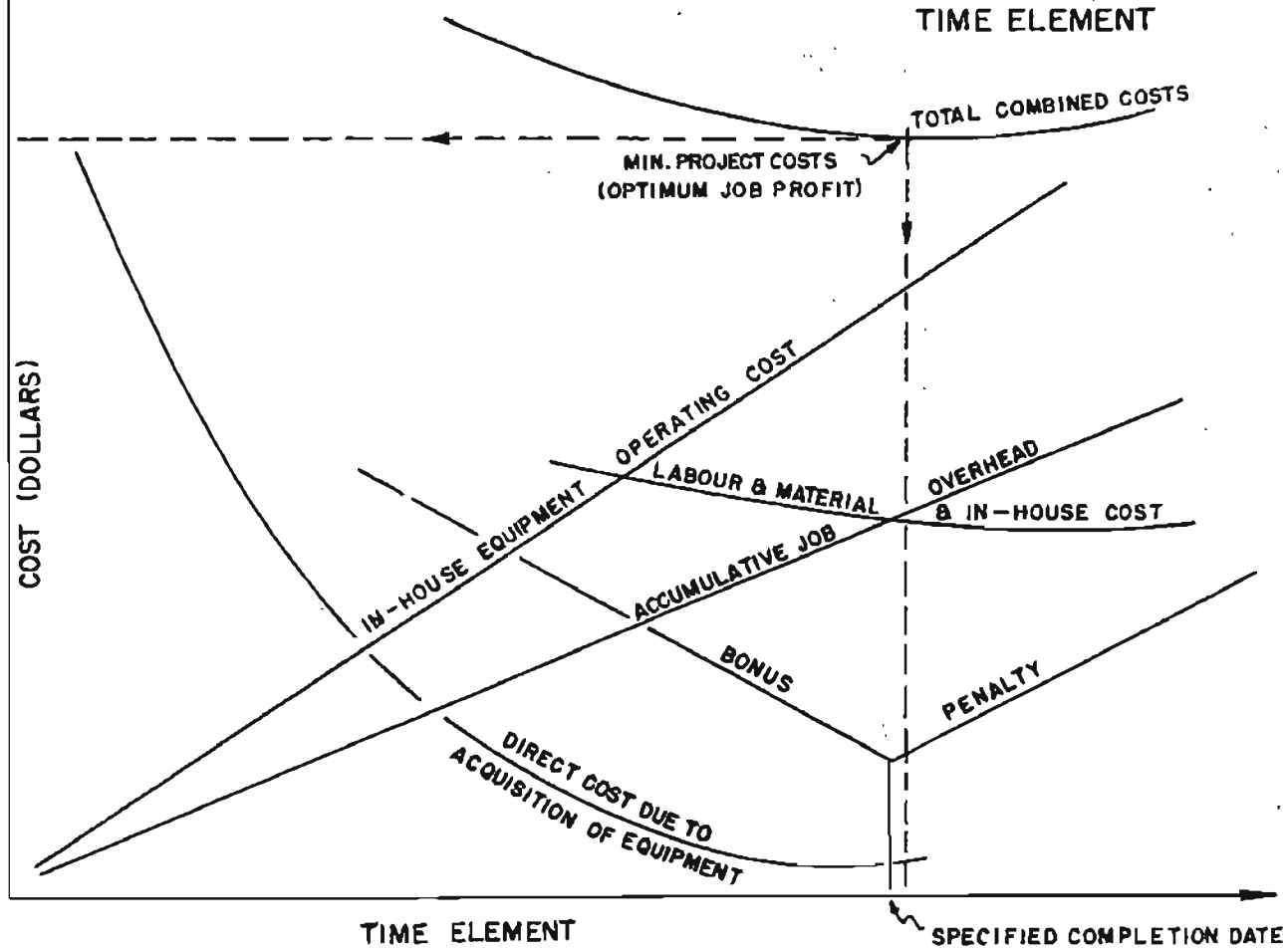

<u>In-house Equipment Operating Cost</u> curve shows the cost of operating resources which are owned by the construction industry and which are utilized on the project in question. This cost is not shown by the curve representing labour and material and in-house equipment in Fig. 1-2.

<u>Accumulative Job Overhead</u> indicates the amount of overhead which has accumulated at any point in time up to the project completion date.

<u>Bonus-Penalty</u> shows the accumulated bonus/penalty at any point in time, and is centered around the specified completion date.

Direct Cost Due to Acquisition of Equipment is the cost of all equipment including capital and operating costs.

Total Combined Costs is the additive effect of all other curves at various project completion dates. The lowest point on the curve will indicate the corresponding minimum project cost and corresponding completion date.

Labour Material and In-house Equipment Cost curve indicates the costs of labour, material and in-house equipment. Material costs escalate with the increase in project duration due to inflationary trends in the market. Labour costs are minimum for normal duration and increase if project duration is crashed or if the project is allowed to drag. In-house equipment costs include the usage costs for in-house equipment allocated to the project.

Variables and Constraints Affecting Total Project Cost

The constraints that affect the method of acquisition are many and varied. The basic areas of constraints are discussed in the following paragraphs.

The geography of certain regions has dictated modes of transportation for resources that are substandard to the norm expected. This then becomes a problem in expediting and logistics and creates wide variances in mobilization costs, and, consequently, these costs must be considered when determining the economics of the project.

The effects of transitional factors are often overlooked by the theoretician. It is often assumed that most major contractors, clients and Governmental agencies are familiar with at least the rudiments of CPM, not to mention procedures for the complete optimization of resource allocations. This, to the demise of the unweary planner, presents an unfavourable constraint that is as real as the lack of critical equipment. Therefore, it is required

that any proposed network based system or methodology be simple in arrangement for easy implementation.

The "feast or famine" domain of many a construction organization presents an "abnormal" constraint on his resources. It is assumed that an organization works within a certain construction dollar value per year and presumably in the same faculty of work. But if one studies the capital expenditures of many of the Canadian Provinces, it is readily noticeable that the total monetary value of construction varies greatly annually; and upon closer review, varies even more greatly between varying faculties of capital expenditure.

For example, a construction organization which has constructed annually in the faculty of marine works at a dollar value of $3,000,000.00 per annum, may find that in the next year the only opportunity open is $2,000,000.00 worth of business in the building trade faculty.

It can, therefore, be said that a major portion of construction work is spasmodic and to a certain extent unpredictable in various regions on a long term basis.

Because of the great variance in work loads and types of work loads, construction organizations may not always be in the position to have a sufficient number of one type of resource. The system must, therefore, provide for the writing off of cost for an additional resource within the duration limits of the

project under consideration, with provision made for the continuous use of that resource on additional projects.

Prevailing income tax criteria provide allowance for depreciation on equipment purchase, and in order to minimize project cost, the system must make provision for increased benefits through depreciation, over rentals and leases.

Technical advances in the physical resources field can be quite rapid. No sooner is one piece of equipment developed and put on the market, than another manufacturer announces new equipment which can out-perform its competitors. The situation is, therefore, created in which technical obsolescence becomes a major consideration and can affect a decision whether to purchase, rent or lease. The technical obsolescence time should be considered in determining the economic life of the resource required to be purchased.

In determining the optimum project cost, an influence which must be considered is that of bonuses and penalties, as shown in Fig. #1-2. This influence is applicable either side of the specified completion date, and can and does affect the total of combined cost curve.

Although optimum job costs are partially dependent on the specified completion date, the construction organization may elect to have the project completed on or before that date in order to maintain

good relationship with their clients. Consideration to this point needs to be given while determining the resources required on a project. If the organization wishes to complete the project within specified limits, the system must be capable of complying with this requirement.

Most construction organizations are normally working on more than one project at any given time. When management reports the number of in-house available resources, consideration must be given to the overall multi-project picture. To this end the system must determine the times when resources become available for projects other than the one under immediate consideration.

Some firms fail in business because of too large an investment in resource inventory. It is, therefore, required that management decide what level of investment its company can accommodate, and the system therefore should be capable of making decisions within the constraint of the specified level of investment.

The range of consideration of the number of resources is between the minimum number of resources that can complete the project and the maximum number that can be physically contained in an effective way on the site of works. The system should be capable of considering these constraints.

The system itself is constrained by its cost of operation and should have a cut-off point in order to prevent unnecessary investigation into impractical levels of resource

allocation.

Present State of Art

Problem solving by use of available mathematical formulae and a rigorous analytical approach to a problem with a large number of variables can be successfully carried out for small network projects of less than 100 activities.[3] However, in real life, where projects normally have activities numbering in the thousands, this method becomes impractical and does not take advantage of our professional ability to judge a more direct approach.

Problem solving by iterative means is quite valid for small problems of unlimited variation. For example, if we have three variables to fit into two operations, there are factorial three ways, i.e., 3! = 6 possible combinations to process; with four variables the number of iterations would be 4! or 24, for five variables the number of iterations is 5! or 120. For 10 variables one would have to carry out 10! or 3,628,800 iterations. In this thesis there are a large number of variables where the potential number of combinations, and, therefore, required iterations, become unmanagable. The iterative approach can, therefore, be used as stated for small problems; however, until such time as computers are developed to operate much faster than present, the iterative approach is unrealistic.

[3] J.D. Wiest - Ref. 30 of Bibliography

Because of the limitations and problems associated with analytical and iterative approaches to problem solving, it appears that a heuristic approach should be used. A heuristic procedure is one in which logical decision rules are substituted for direct mathematical analysis or exhaustive iteration. Heuristic procedures lead to consistently good results and may actually achieve optimum results.* However, in general, there is no way of knowing how near optimum an obtained solution might be. Heuristic decision rules may consider only one or a few attributes or variables. Most heuristic decision rules used in practise are single atrribute rules.

As most project managers realize, activities may be constrained by any number of variants on the available resources as well as by their logical sequence. It seems most promising to use a heuristic approach in developing a mathematical model.**

* Ref. 30 of Bibliography

** A heuristic model has been developed for the purpose of problem solving and it is presented in Chapter III.

CHAPTER II

PROBLEM STATEMENT

TABLE OF CONTENTS

Initial Problem Statement	Page 14
Preamble to Inputs	14
Inputs	15
Outputs	23
System Identification	27

CHAPTER II

PROBLEM STATEMENT

This Chapter will summarize the factors, as outlined in Chapter I, into an initial problem statement. The inputs that effect the problem will be listed and commented upon and the desired output listed with appropriate comment. Other factors which may or could effect the problem are commented upon and the Chapter concludes with system identification.

Initial Problem Statement

As stated in Chapter I, present methods of resource allocation provide for the leveling of resources which produce maximum use of the resources but does not necessarily achieve minimum project cost. These methods do not link resource allocation procedures to the cost of acquiring resources which is an important factor when applied to projects of intensive equipment use. The comparison of cost of the three methods of acquisition (purchases, rentals and leases) separate from resource allocation, produces minimum acquisition cost but does not necessarily produce minimum project cost. Thus the present methods fail to produce an optimum solution for minimum total cost of the project.

Preamble to Inputs

The factors that effect the problem are shown as inputs. The inputs are described on the following pages and their

representative symbol which will be used throughout the thesis, and in particular the mathematical model in Chapter III, are shown in brackets. All inputs shown have a direct relationship to the desired output and, consequently, in the determination of the project cost. (Inputs required for standard procedures of resource allocation, which is a sub-system for the methodology proposed in this thesis, are not included in the following).

Inputs

1. Capital cost of additional resources (A) - this is the capital cost of purchasing at market value one unit of an additional resource. (E.g. selling price of the resource, including Federal, Provincial and Municipal taxes, freight charges from the manufacturing plant and costs to make operational at the owner's premises).

2. Rental cost of additional resources (B) - this is the per diem (weekly, monthly or lump sum) cost of renting an additional resource from outside agencies and including operator's wages, fuel, oils and lubricants). Rates apply while the equipment is in possession of the user.

3. Economic life of resource* (C) - this is the length of time that the particular resource will continue to be productive from an economic point of view and, therefore, the length of time allowed to amortize the capital cost of the resource when a direct purchase is made. Economic life is obtained considering the influence of technical obsolescence. The economic life of equipment is calculated separately by the user and this information is provided by him for use with the methodology proposed in Chapter III. In the case of used equipment, the term economic life refers to the remaining productive years of the resource. The terms 'economic life' and 'expected life' of a resource are used synonymously throughout the thesis.

4. Maximum level of resources (D) - this is the maximum level or number of resources of each resource type that can be utilized on the project and is limited by the physical characteristics of that project. This level will become one of the upper levels or cut-off points for iterations when allocating resources. It is to be noted that the

* Economic life can be defined as the number of years in which a resource should be replaced in order to optimize the profits of its owner.

Several methods have been developed to determine the economic life of equipment. The author has referred to works by Douglas James - Construction Equipment Policy: The Economic Life of Equipment - Stanford University 1966.

Douglas, James - Ref. 11 of Bibliography

physical limitation is not for an individual activity but for the project as a whole.

5. Investment policy (E) - each company has a "line of credit" and, consequently, a maximum of available investment capital. The maximum investment applies to all projects of the firm under consideration, and, therefore, only the difference, if any, on the amount now invested and the maximum investment capital is available to this project. Therefore, investment policies are determined by the firm's total available capital less the amount required for working capital. The amount of available investment capital is reduced as purchases are made.

6. Project duration constraint (F) - this includes items of bonus, penalties and liquidated damages for failure to complete the project within the specified time element or success in completing the project in shorter time than stipulated in the contract documents. This input is given a monetary value and is necessary when computing total project cost.

7. Resource-idle time cost (G) this is the cost of being in possession of a resource when it is non-productive. It is expressed in daily, weekly, monthly, etc. rates, and is a function of the capital cost to purchase, interest rates and life expectancy. It includes insurance of equipment preventive maintenance programmes and storage facilities of equipment which is being considered for purchase.

8. Resource operating costs (H) - the cost to operate the resource including operators' wages, fuel, oil lubricants, spare parts, taxes, insurance, the cost of preventive maintenance programmes and storage facilities.

9. Interest rate (I) - this implies the current interest rate, available to this organization, i.e., cost of capital and is a function of the availability of money and the credit rating of the organization in question.

10. Salvage value (J) - this is the expected capital resale value of the resource, converted to present worth, at the completion of the life expectancy of the resource. Salvage value is computed while calculating the economic life on the basis of the rate of decline of resale value per unit of time*.

11. Additional projects (L) - consist of the expectation of obtaining or not obtaining other projects, (assuming continuous use of the same resource) and is based on market trends, political and other influence. To a large extent, potential new projects and their durations affect the manner in which a resource is or is not required. The input will, therefore, be a time element equal to the project duration of those projects. The time element thus arrived is added to the specified project duration when considering the purchase of new resources.

* Construction-Equipment Policy - The Economic Life of Equipment James Douglas, Stanford University, July 1966.

This will, in effect, increase the time permitted for repayment of a purchase beyond the duration of the project in question.

12. Mobilization costs (M) - each project has widely different mobilization costs, depending on the project locations, climatic conditions, transportation, communication facilities and other logistic problems. This cost includes all expenditure in relocating a resource from its present site to the project site, and upon completion of its use, moving the equipment to its original or some other location.

13. Level of resources available (N) - the number of each type of resource available which the construction organization states as its "in-house" ability to apply to the project under construction. The level, which will have a numeric value, is required in order to determine project costs at and below that level, and to establish a basis from which unit increments may be made and project costs determined at those incremented levels. When the construction organization is reporting the N level, the morale of skilled, semi-skilled and unskilled workers is important for the most efficient and effective completion of a project and should, therefore be given consideration. New, up-to-date equipment, for example, can help a contractor receive better results than with older equipment. Depending on the company's past performance, labour unrest, etc., it may be advantageous to acquire new equipment, even though economically it

appears beneficial to rent or lease equipment. It may also be beneficial to purhcase, rent or lease, even though there are "in-house" resources available which are not in good working order. Management must consider the morale factor on the project efficiency and profits when it is reporting the number of resources available. If, for example, a construction organization has five compressors, and it is known that one particular one has a record of low productivity and has caused a decline in efficiency due to low morale, then the N level of available resource reported should be four and not five.

14. Rate of overhead (O) - this applies to the daily (weekly, monthly, etc.) fixed cost of all non-productive operations on the project under study. It is to be noted that this includes a pro-rated portion of head office overhead as determined by management. It also includes a prorated cost of owning "in-house" resources that are not used on the project, the cost of insurance programme and the cost to fund this project. The pro ratio portion of overhead chargeable to the project is obtainable by proportioning the dollar value of the project in question with the total dollar value of all current projects. The rate of overhead on this project is obtainable by spreading the portion applicable over the time element involved.

15. Project duration (P) - is the total duration in which all

work of the project should be completed, and is determined by contract specifications and appropriate documentation. If no completion date is specified in the contract documents, the duration is based on the normal amount of time required to complete the project as determined by the standard procedure for logic sequencing shown in the applicable network diagram.

Another project duration is used in this thesis as an output. For purposes of calculations of cost, a second and variable duration is required. This variable duration is designated Pv. Pv is necessary when project duration changes, depending on the number of resources applied to each activity.

16. Prestige Factor (S) - the objective of this study is intended to optimize job profits of the construction organization. Therefore, the project duration, although significant, is not necessarily a controlling factor. It is recognized, that the organization may wish to complete the project on or before the stipulated completion date for reasons of company prestige, political obligations, continued good business relationships, etc. If this should be the case, then the organization must stipulate this as a condition of the resource allocation or as a condition of project cost and this condition will be used as an input.

17. Lease cost of additional resources (T) - this is the per

diem (weekly, monthly or lump sum) cost of leasing an additional resource from outside agencies and including operators' wages, fuel, oil and lubricants. Lease costs will normally be less than rentals and more than direct purchase, however, the construction organization will maintain the option to purchase but will not have the right to return equipment during periods of idle time.

18. Utilization Factor (U) - this is an indicator associated with each resource type. If a resource can be used on another project in a continuous manner, it is designated 1; if not U becomes zero. When U is 1, then the cost of principal and interest associated with a purchase, applies only when the resource is on the project in question. When U is zero, the cost of owning the resource is applicable until the project is completed, whether or not the resource is being utilized.

19. Minimum level of resources (V) - the minimum number of resources for each resource type than can be used to start and complete a project. This level becomes the lower limit of the number of resources to be allocated, and provides one level on which project costs are to be determined.

20. Other project costs (Y) - this includes all other project costs of labour, materials and the usage cost of in-house equipment. It considers existing labour union agreements with regard to rates of pay and fringe benefits and

considers materials escalation cost. It may vary with each update. This cost can be furnished by any of the cost control programs like IBM 'Program Management System Version IV'. Value of Y can be computed by 'cost processor'.

21. Depreciation Benefit (Z) - this is the dollar benefit for each resource type to be obtained from acquisition by purchase over lease or rental, the tax benefit of which will be approximately equal. This figure which can be either positive or negative is provided by the organization, and is based upon expected profits of the project, tax position of the organization, methods used for depreciation and prevailing tax laws. It is used in this thesis as a provided lump sum amount which in turn is spread over the purchase period by use of the capital recovery factor.

Outputs

1. Most Economical Level of Resources - i.e., the minimum level of each resource type and the periods in which they are required to complete the project at the least cost to the construction organization. The most economical level will lie between Input V and Input D inclusive.

2. Maximum profit project duration - the period of time required to complete the project with maximum project

profits.

3. Minimum project costs - the cost to the construction organization, using the most economical level of resources at the maximum profit project duration. Conversely, this provides the maximum profit to the contractor. Project costs also include costs that are constant for the project and which do not vary regardless of the method of acquisition.

4. List of additional resources - a record of the number of each resource type that have to be acquired and the method of acquisition of each.

5. Project schedule - preparation of a schedule, that accompanies the most economical level of resources, showing the preceding and succeeding nodes (i - j) of each activity, the activity duration, the type and number of each resource type required, the early start (ES), earliest finish (EF), latest start (LS) and latest finish (LF) by calendar dates and the total float of each activity.

6. Available additional resource - a record of all idle times by calendar dates, when resources are not scheduled for work. This will provide the construction

organization with known resource flexibility for consideration on other projects or additional works on the project in question.

INPUT - SYSTEM - OUTPUT DIAGRAM

FIG. 2-1

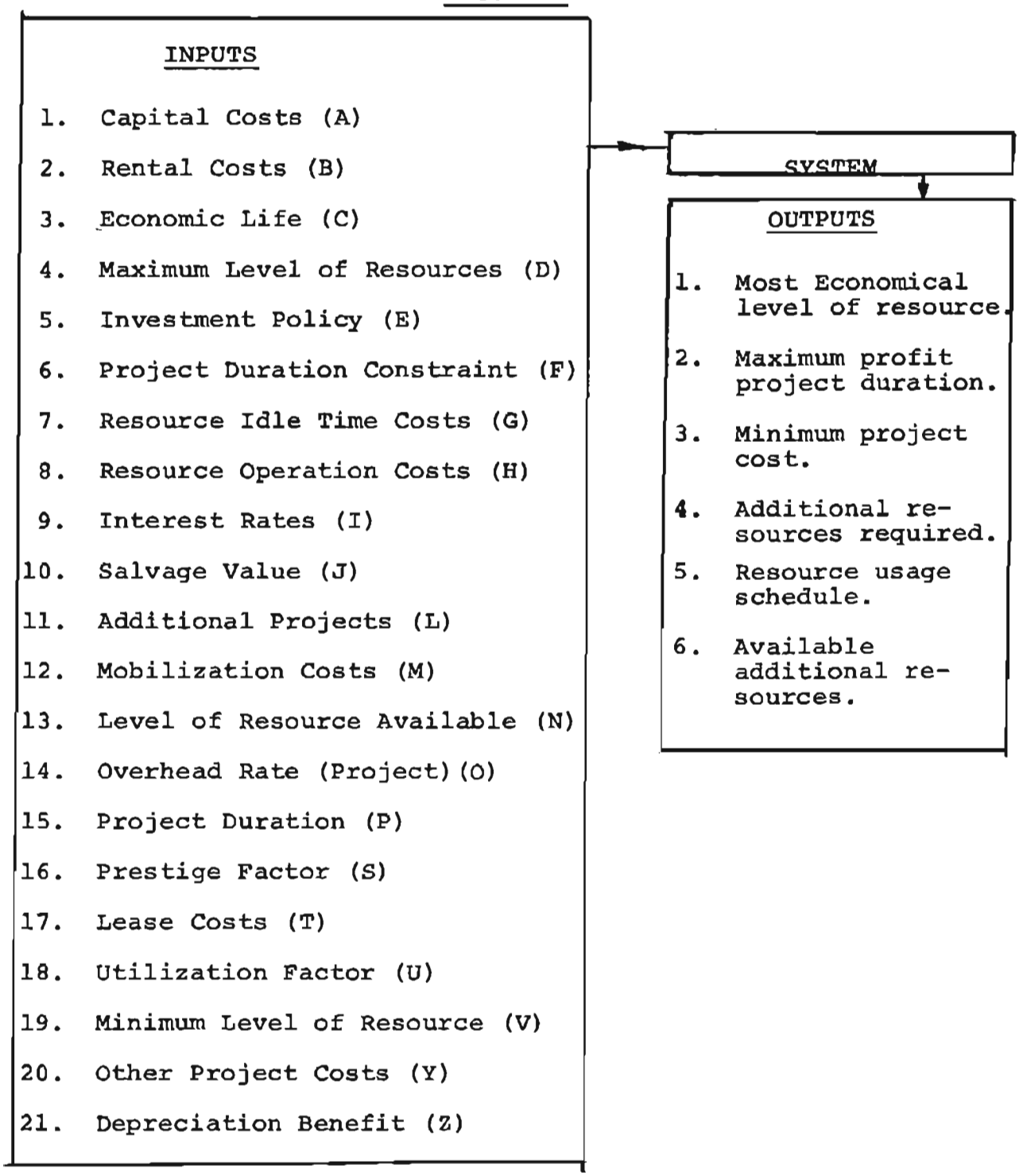

System Identification

The problem has been outlined in Chapter I. Although the use of CPM scheduling and resource allocation is on the increase, there is no known method in existence to combine their use with existing procedures for determination of the mode of acquisition of equipment. The absence of this combination on projects of heavy equipment use precludes the determination of a project duration commensurate with the minimum project costs.

A comprehensive system, of minimum complexity, which can be readily understood and easily integrated into the construction industry, is needed to determine if additional required resources should be purchased, rented or leased. The system must take into consideration the financial abilites of the organization, the economics of the transaction, and give consideration to the factors of additional projects, project overhead, operating costs, mobilization costs, the economic life of the equipment, prestige values and depreciation benefits. The system must provide the most economical level of resources, the minimum project costs, a project schedule, a list of additional resources, and a list of times when unscheduled resources are available.

CHAPTER III

THEORETICAL METHOD OF SOLUTION

Preamble	Page 29
Explanation of Summary Flow Charts	30
Summary Flow Chart	34
Logic and Rules of Application	35
Symbols	37
Mathematical Formulae	38
Symbols Used in the Formulae and Flow Charts	42
Detail Flow Chart	45
Summary	71

CHAPTER III

METHOD OF SOLUTION

In Chapter I the problem area and environmental analysis were presented. Chapter II presented the factors which effect the problem. This Chapter will explain how it is intended to solve the problem mathematically and show the methodology by the use of detailed flow charts.

The methodology can be used with existing programmes of scheduling, cost control and resource allocation. The details of these programmes are not presented, however, the interrelationship of the existing programmes with this methodology is pointed out.

A summary flow chart is presented and explained, rules of logic and application are described, mathematical symbols are shown and mathematical formulae developed. The explanations accompanying the detailed flow chart show the step by step procedure for the methodology.

Explanation of Summary Flow Chart

This chart is presented in Figure 3-1 and gives an overview of the methodology. The detailed flow chart is presented at the end of this chapter. An explanation is presented with each step of the detailed flow chart and a brief explanation of the summary flow chart follows.

Start - The beginning of the programme.

Read Inputs - These inputs are the basic information required in order to allocate resources the minimum level of resources required in order to complete the project, the available number of resources to be used, and all basic information required for the economic calculations and ultimate comparison of the modes of acquisition.

Allocate Resources - Resources are allocated to each activity of the network on the basis of the minimum number which can complete the project in any length of time. The allocation of resources can be accomplished by the use of any one of the existing and proven methods currently in practice.

Time - Resource Usage Table - Having allocated resources and knowing when each type of resource is required, and consequently, not required, a resource usage table is established for each resource type. The table shows when each unit of resource is first required, when it is idle, and when it is no longer required. Each table spans the project from beginning to end.

*Present Worth of Purchase - The cost of each type of resource is checked against the investment policy, and the economic life is checked with the project duration. A check is made to determine if the prestige factor permits a project duration longer than that specified, and to decide if the resource can be utilized on other projects. The cost of each resource is spread over its economic life and the present worth of equal payments of principle and interest are included, for the life of the project, in the project costs. The value of the benefits from depreciation in excess of lease or rentals, mobilization cost, salvage value, operation costs, idle time costs are calculated. All values obtained are converted to present worth using the start of the project as time zero. The dollar value of the total cost due to a purchase is obtained.

*Present Worth of Lease - As with purchase, the present worth of the total cost of all factors effecting the cost of leasing, are calculated and stored for future comparison.

*Present Worth of Rentals - As with purchase and lease, the present worth of the total cost of all factors effecting the cost of renting are calculated and stored for future comparison.

*It is reasonable to compare present worths because the time differential amongst the optimum project duration and the near optimums (both less than and greater than the optimum project duration) is insignificant.

Comparison of Selection of Acquisition Modes - Knowing the present worth of all costs effecting purchase, lease and rentals, a comparison of dollar values is made to select the mode of acquisition at minimum cost. In the improbable case of two values being equal, priority is given to the method of acquisition with the least capital commitment, with rentals having highest priority followed by lease and then purchase. A selection of the mode of acquisition is made.

Determination of Total Project Cost - Materials, labour and in-house equipment costs are added to the cost of equipment to be acquired in order to find the total direct cost of the project.* The bonus or penalty is considered and the cost of overhead is added to obtain the total cost. The total cost of the project is now known for the minimum level of resources used in this iteration of resource allocation. This value is recorded for comparison with total cost of the project resulting from other levels of resources.

Increase in the Level of Resources - The level of each type of resource to be used is now incremented by one. Should any one type of resource be constrained by physical limitations that one resource type is not incremented. Total project costs are calculated again using the higher level of resources. The incrementation by one continues

*Materials and labour cost can be obtained as output from cost control programs, e.g., IBM Program Management System, Version IV.

until either three consecutive increases in total project costs are recorded or until each resource is limited by physical conditions, whichever should occur first. The total project costs are recorded for comparison.

Selection of Optimums - Knowing the project cost for each level of resource investigated, the level of resource resulting in the least total cost is selected. This provides the practical optimum level of each resource type required for this project.

Outputs - The first result is the practical optimum level of resources. The next is the practical optimum project duration associated with this optimum level of resources. Another output is the total project cost for this project duration. A calendar schedule for the complete project and the number of each type of resource acquired and the corresponding modes of acquisition is provided. The number and type of each resource which is completely idle is provided. A table is produced showing the name of each resource type and a schedule showing when each resources type becomes idle and the period of idle time on the project when presumably they are available for work on other projects. A provision is made whereby the economic benefits of returning a rented resource during idle periods to its owner are tabulated.

SUMMARY FLOW CHART

FIG.3-1

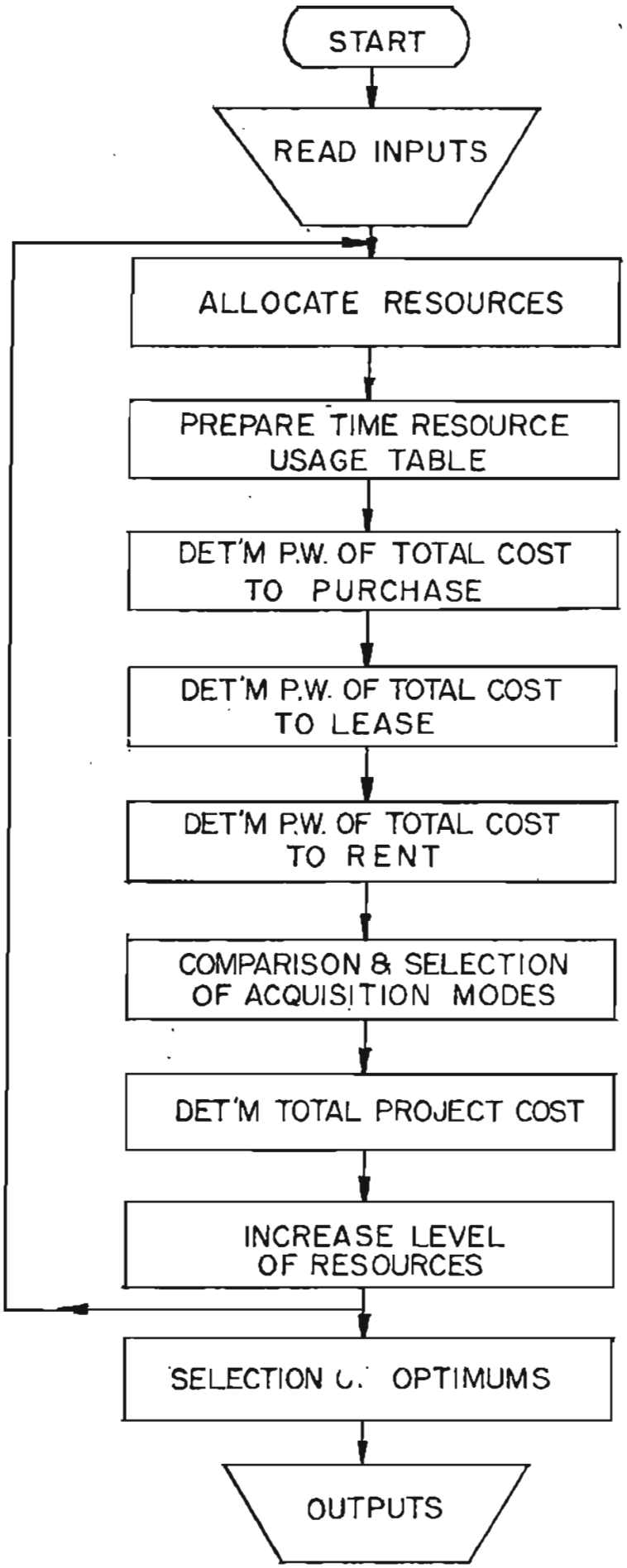

Logic and Rules of Application

Rule 1 - The method of acquisition of an additional resource, i.e. purchase, rent or lease, is an important factor in determining project costs. The determination of project cost for the purpose of this thesis is the sum of all costs involved in the method of acquisition of a resource and including the present worth of the capital cost, overhead on the project, idle time costs, mobilization costs, resource operating costs, benefits from depreciation, salvage values, and provision made for other fixed costs of materials and labour and provision for bonuses and penalties.

Rule 2 - The cost of purchase is determined and considered as the base. The costs of leasing and renting are compared with it.

The lesser amount is selected in all cases. The probability of having equal values for two or more means of acquisition is very small. If such a situation should arise, priorities are established to keep the capital outlay at the minimum.

Rule 3 - The cost of purchasing an additional resource (A), must not exceed the company investment policy (E),

or cause the investment policy to be exceeded.

Rule 4 - When comparing any costs, either capital or current, the value of money is to be converted to present worth using time zero as base.

Rule 5 - The economic life of any resource to be acquired must be less than the duration of the project on which the resource in question will be used. When a new project is expected on which the resource can be used, the economic life must be less than the project duration plus the allowed time for the additional new project.

Rule 6 - When calculating the present worth of a capital expenditure of a new resource, the cost is to be calculated on the basis of equal periodic payments of principal (A) and interest (I), spread over the economic life (C) of the resource. This is accomplished using the standard capital recovery factor (CRF) formulae. The amount of the periodic cost that is considered chargeable to this project is the amount corresponding to the duration of the project. This amount is converted to present worth at zero time.

Symbols

The number of inputs which were previously discussed and which are to be used in the model are enumerated below using their short title and their designated symbols.

A - Capital Cost of One Additional Resource

B - Rental Cost of One Additional Resource

C - Economic Life of a Resource

D - Maximum Level of Resources

E - Investment Policy

F - Project Duration Constraint - F_1 (Penalty and F_2 (Bonus)

G - Resource Idle Time Costs

H - Resource Operating Costs

I - Interest Rate

J - Salvage Value

L - Increased Duration (i.e. new projects where continuous use of the resource in question can be employed)

M - Mobilization Costs

N - Level of Resources Available

O - Rate of Overhead

P - Project Duration as Specified

S - Prestige Factor

T - Lease Cost of One Additional Resource

U - Utilization Factor

V - Minimum Level of Resources

Y - Fixed Project Cost

Z - Depreciation Benefit

Mathematical Formulae

All formulae are based on either

(i) Equal periodic payments of principal and interest, or,

(ii) Lump sum monetary exchange at some one given point in time, both (i) and (ii) method of payment are converted to present worth.

To obtain (i) above, use $\frac{I(1+I)^n}{(1+I)^n-1}$ which is the capital recovery factor (CRF) by which a principal sum must be multiplied to provide equal payment of principal and interest for n periods of time*.

To convert any one of these payments to present worth, multiply by the present worth factor (PWF) of

$$\frac{1}{(1+I)^n}$$

The present worth of all annual payments is obtained from the following formulae.

$$\sum_{n=1}^{n} (\text{PWF} \times \text{CRF}) \text{ Capital Outlay}$$

* E.P. DeGarmo - Reference Number 9 of Bibliography

From the above two basic formulae, all required monetary values for different time periods and rates can be established. When the disbursements are uniformly distributed, the following uniform series present worth factor (SPWF) can be applied.*

$$\text{i.e.} \quad \frac{(1+I)^n-1}{I(1+I)^n} = \text{SPWF}$$

The above formulae have been used in the methodology in the following form. The following values of theta (θ) which will be used in the mathematical formulae are enumerated below.** Each θ is accompanied by the conversion factor (C F) which ensures that all time elements are uniform, i.e., daily, weekly, monthly or annual.

$CF \times \theta_1 = X_{ij\ell}$	Time at which resource type j at level l of the i iteration is first required.
$CF \times \theta_2 = Pv_i - X_{ij\ell}$	Length of time from first usage to project completion.
$CF \times \theta_2^1 = ty_{ij\ell} - X_{ij\ell}$	Length of time from first usage until resource is no longer required.
$CF \times \theta_3 = X_{ij\ell} + C_j$	Limits of time from first usage to end of the economic life of the resource in question.
$CF \times \theta_{3p} = ta_{ijp\ell}$	Length of an idle period of time.
$CF \times \theta_{4p} = \alpha_{ijp\ell}$	Time at which a resource first becomes idle.
$CF \times \theta_5 = \alpha_{ij1\ell} - X_{ij\ell}$	Length of time from first usage until resource first becomes idle.
$CF \times \theta_{6p} = \alpha_{ijp+1\ell} - \beta_{ijp\ell}$	Length of time period in which a resource is being utilized.

* E.P. DeGamo - Reference 9 Bibliography
** Illustrated in Fig. 3-1A

GRAPHIC ILLUSTRATION OF ALL VALUES OF THETA FOR ONE RESOURCE TYPE AND ONE RESOUCE LEVEL

FIG. 3–1A

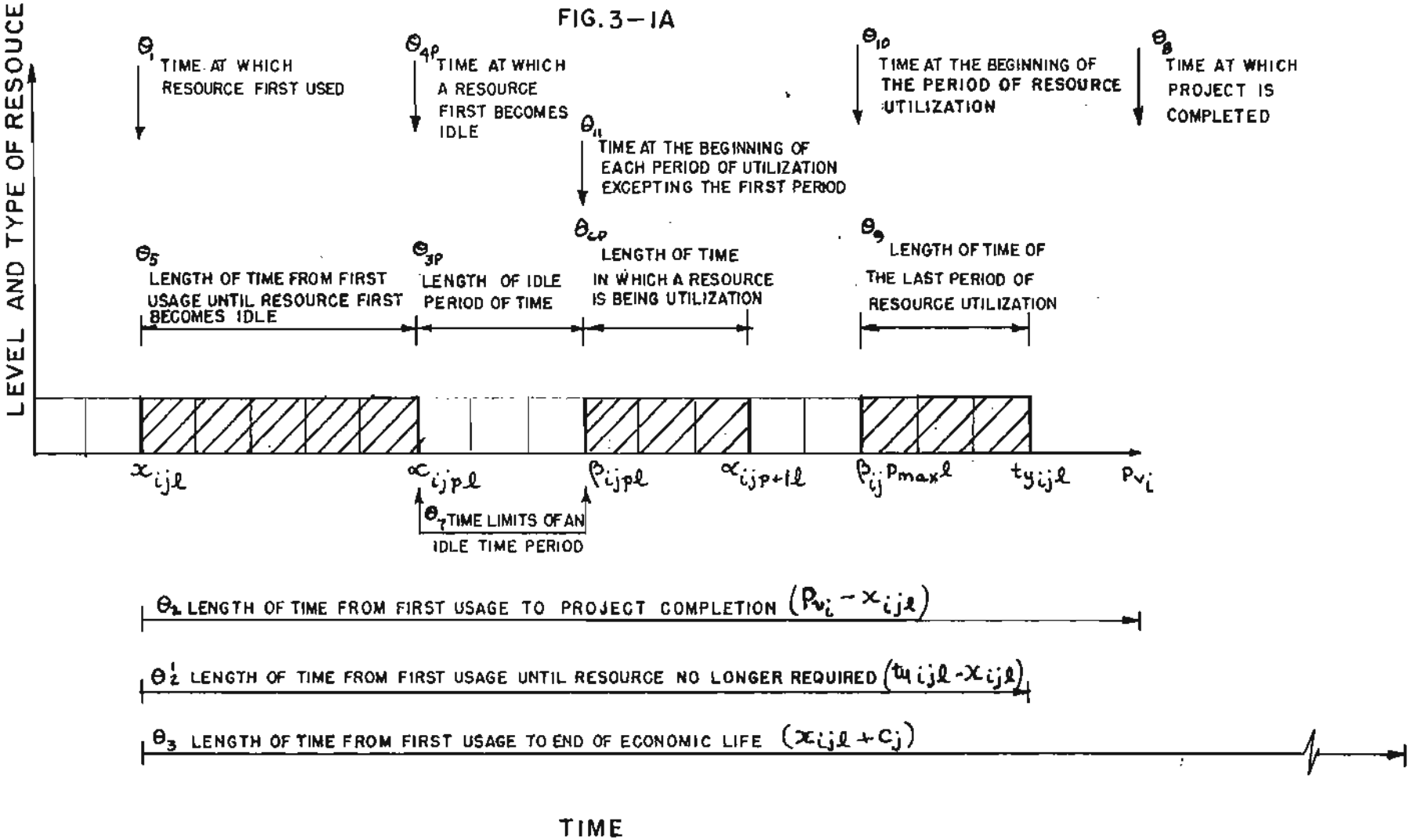

$CF \times \theta_7 = \beta_{ijp\ell} - \alpha_{ijp\ell}$	Time limits of an idle time period.
$CF \times \theta_8 = P_{vi}$	Time at which project is completed.
$CF \times \theta_9 = ty_{ij\ell} - \beta_{ijp_{max}\ell}$	Length of time of the last period in which the resource is being utilized.
$CF \times \theta_{10} = \beta_{ijp_{max}\ell}$	Time at the beginning of the last period of resource utilization.
$CF \times \theta_{11} = \beta_{ijp\ell}$	Time at the beginning of each period of resource utilization excepting therefrom the first period of utilization.

The capital cost of resource j is A_j. Its economic life is c_j. (Other symbols are shown immediately prior to the detail flow charts of this chapter). The cost per period of time is the CRF times the capital cost. The depreciation benefit is a given cost per the same period of time and the salvage value occurs at the end of the economic life of the resource. Therefore,

$$\left[A_j - Z_j - J_j(PWF)^{c_j}\right] \times \left[\ CRF\ \right]^{c_j} =$$

cost per year of an additional resource (CPY).

The above annual cost is converted to the present worth each year from the time when the resource is first acquired to the end of its economic life $(x+c_j)$

The cost to this project will be either -

$$(PWF)^{\theta_1}(SPWF)^{\theta_2}\ (CPY) \quad \text{---------- Eg. 1}$$

or

$$(PWF)^{\theta_1}(SPWF)^{\theta_2^1}\ (CPY) \quad \text{---------- Eg. 1(a)}$$

The use of Equation 1, or 1(a) will depend on the utilization factor U.

If the resource can be used on another project, after it is no longer required on this project, Equation 1 is required in order to calculate cost. If the resource cannot be used on another project equation 1(a) is required.

Present worth of mobilization cost = $M_j(PWF)^{\theta_1}$

---------- Eq. 2

Present worth of operating cost =

$$Hj(SPWF)^{\theta 5}(PWF)^{\theta 1} + \sum_{p=1}^{p=P_{max}-1} \left[Hj(SPWF)^{\theta 6p}(PWF)^{\theta 11} \right] + Hj\ (SPWF)^{\theta 9}(PWF)^{\theta 10}$$

---------- Eq. 3

Present worth idle cost =

$$\sum_{p=1}^{p = P_{max}} G_j(SPWF)^{\theta 3p}(PWF)^{\theta 4p}$$

---------- Eq. 4

Present worth lease cost =

$$Tj\ (SPWF)^{\theta 2}\ (PWF)^{\theta 1}$$

---------- Eq. 5

Present worth rental cost =

$$Bj\ (SPWF)^{\theta'_2}\ (PWF)^{\theta_1} \quad \text{------} \quad \text{Eq. 6}$$

Present worth bonus/penalty = $F \times PD_i\ (PWF)^{\theta_8}$

where $F = f(Pv_i)$

and $PD_i = \left| Pv_i - P \right|$ ------ Eq. 7

Present worth of overhead =

$$O(SPWF)^{\theta_8} \quad \text{------} \quad \text{Eq. 8}$$

Present Worth of Fixed Cost =

$$\frac{Y}{Pv_i}\ (SPWF)^{\theta_8} \quad \text{------} \quad \text{Eq. 9}$$

DETAIL FLOW CHART SYMBOLS

P	=	Counter for the number of idle time periods
CF	=	Conversion factor. The time usage resource chart will be in days. Interest rates are per annum. To put all units at one basic time interval, the conversion factor is introduced
COUNT	=	Counter to record number of iterations
$EQUIPT_j$	=	Accumulative cost recorded for each resource for one iteration
SB	=	Send back (when investigating resource acquisition by rentals and the resource can be returned for a period of time)
LL	=	Lower limit of a time period associated with resource usage
ULL	=	Upper limit associated with "in-house" equipment and resource allocation
METHD	=	Method of acquisition. METHD 1 is purchase, METHD 2 is lease and METHD 3 is rent
PWMNC	=	Present worth of minimum cost
PENBON	=	Amount of penalty/bonus
ℓ	=	Number of an individual resource type
RME	=	Resource minimum effective
k	=	Primary measure of unit duration for resource allocation
RESCE	=	Measure of the number of each type of resource actually allocated

OVERHD = Overhead cost

TTLCST = Total cost

DIRCST = Direct cost

SUR = Survivor - the lower cost when comparing two values of total project cost

ACQ = Acquisition - the number of each resource type to be acquired

Pv = Project duration actual - this is the project duration obtained by use of the resource allocation procedure and is dependent upon the number of resources allocated

PWHPCN = Present worth of "in-house" equipment operating cost

PWHPC = Present worth of equipment operating cost associated with acquisition

LX = Indicator to show whether or not acquisition by purchase was made

ty = End of a last busy period

m = Total number of resource types to be used

i = Number of iterations

j = Resource type

RM = Resource minimum

DETAIL FLOW CHART

FIG. 3—2

SHEET 1

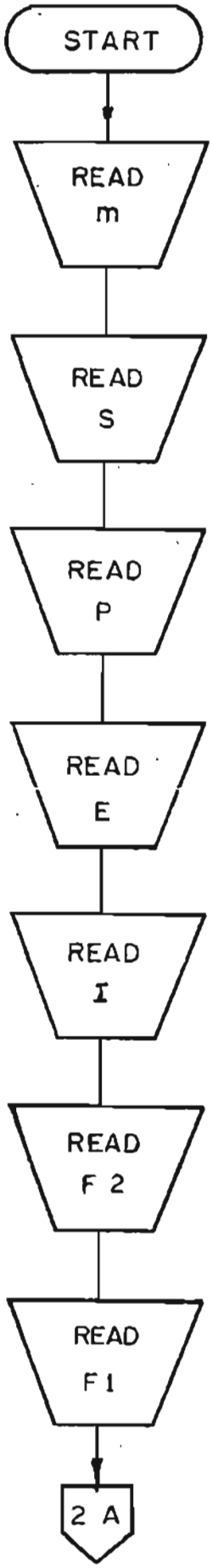

START PROGRAM

NUMBER OF RESOURCES TYPE

PRESTIGE FACTOR

SPECIFIED PROJECT DURATION

INVESTMENT POLICY VALUE

INTEREST RATE

VALUE OF BONUS

VALUE OF PENALTY

Flow Chart Sheet 2

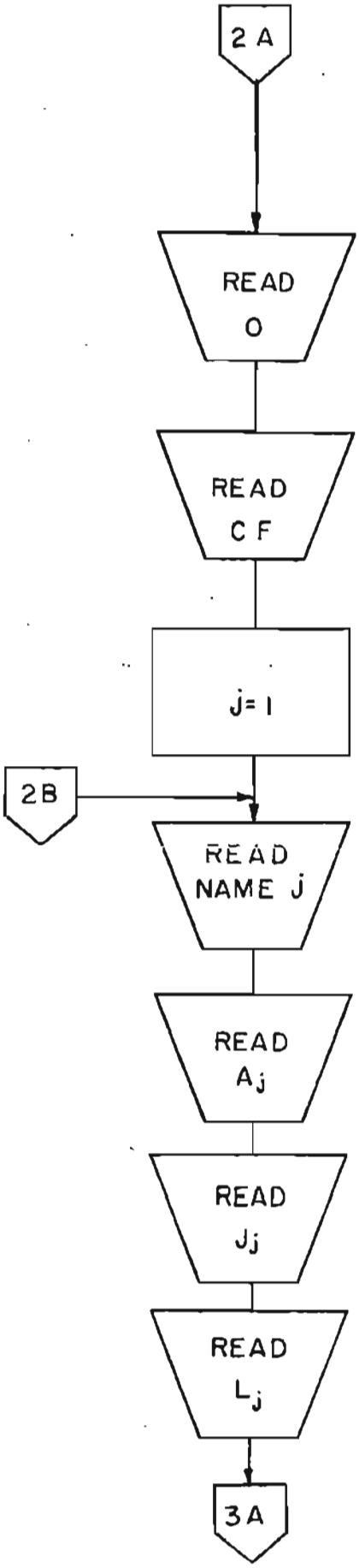

OVERHEAD RATE

CONVERSION FACTOR

INITIALIZE j

NAME OF RESOURCE TYPE

CAPITAL COST

SALVAGE VALUE

INCREASED TIME DURATION ALLOWANCE

Flow Chart Sheet 3

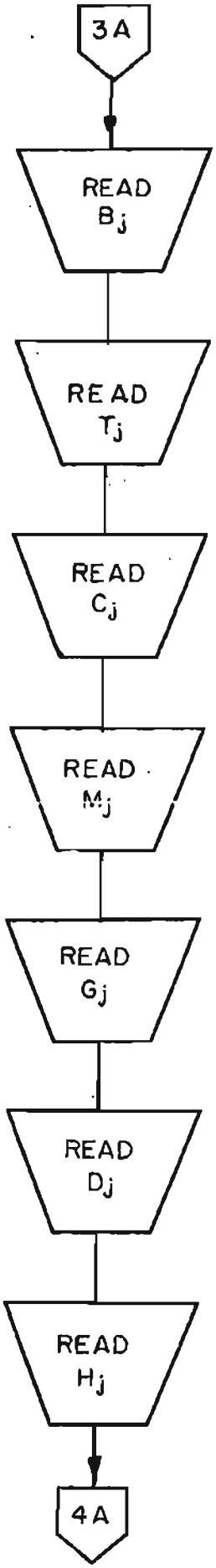

RENTAL RATE

LEASE RATE

ECONOMIC LIFE

MOBILIZATION COST

IDLE TIME COST

PHYSICAL LIMITATION

OPERATION COST

Flow Chart Sheet 4

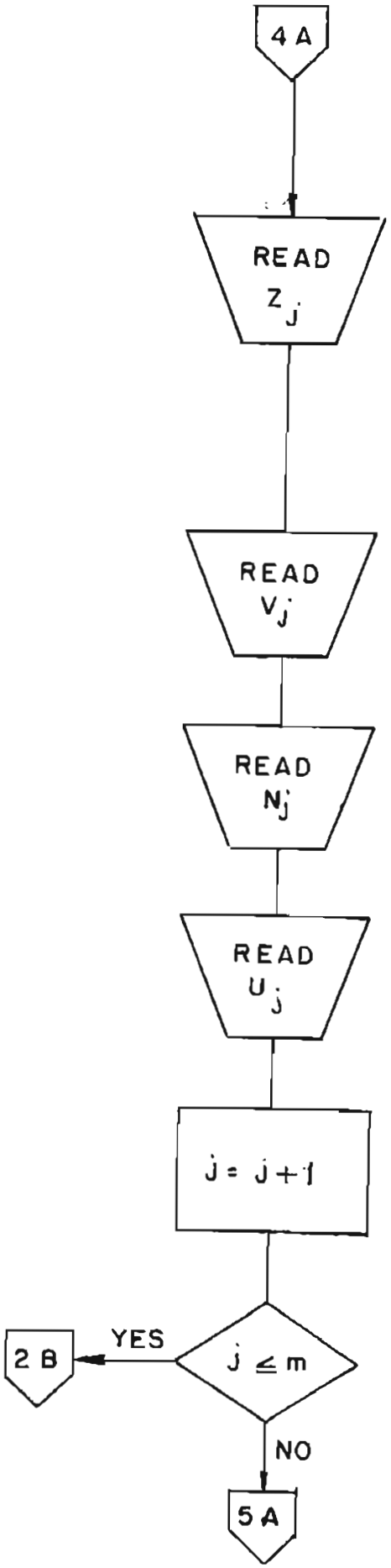

DEPRECIATION BENEFIT

MINIMUM LEVEL OF RESOURCES

AVAILABLE LEVEL OF RESOURCES

UTILIZATION FACTOR

INCREMENT j

CHECK TO FIND OUT IF ALL RESOURCE TYPE INCLUDED

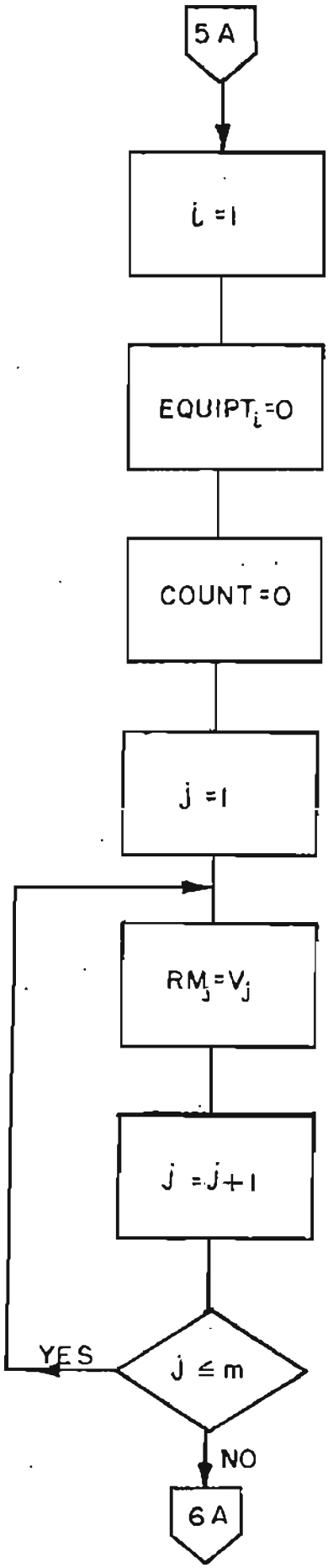

INITIALIZE COST OF ACQUISITIONS

INITIAL COUNTER

INITIALIZE NUMBER OF RESOURCES TO BE USED FIRST EQUAL TO THE MINIMUM NUMBER THAT CAN BE USED

CHECK TO INSURE ALL RESOURCE TYPES INCLUDED

Flow Chart Sheet 6

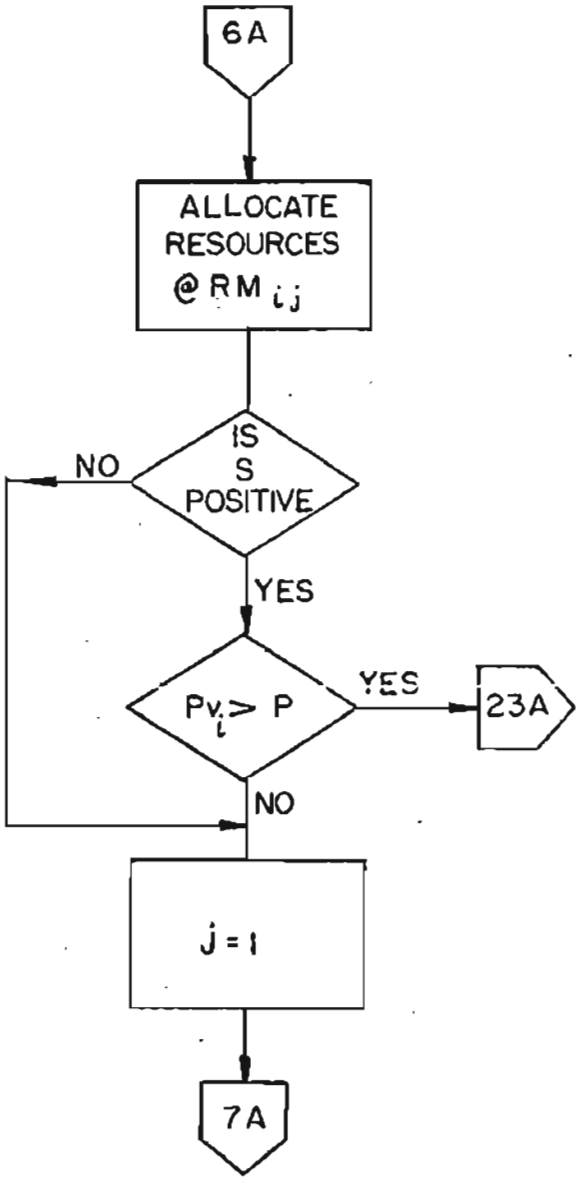

ALLOCATE RESOURCES

CHECK TO DETERMINE IF S PERMITS A PROJECT DURATION (Pv_i) > SPECIFIED (P). IF NOT, INCREMENT i BY 1 UNTIL P OR SHORTER TIME IS OBTAINED

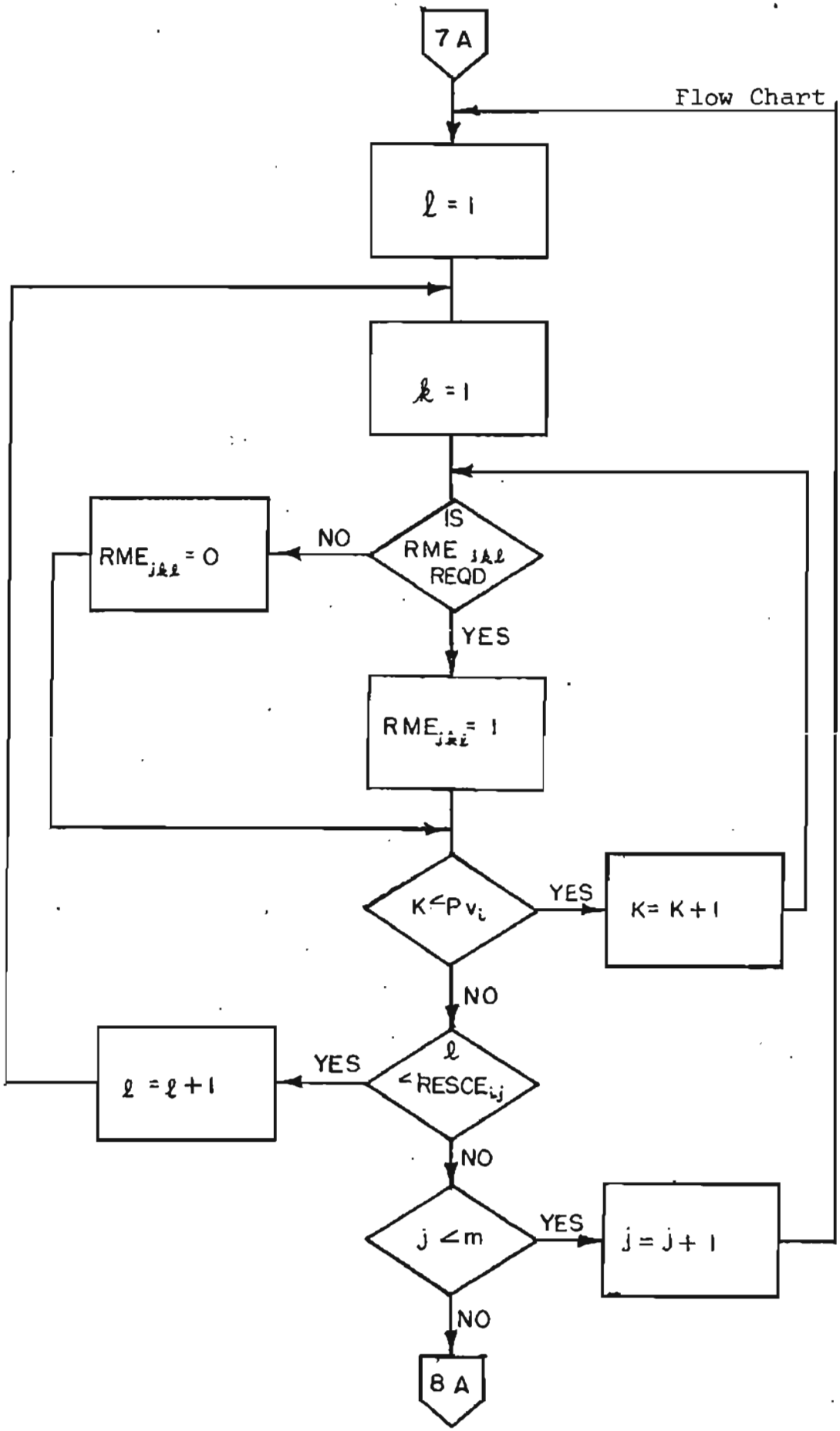

ESTABLISH TABLE (K) - A TIME RESOURCE USAGE TABLE. IF A RESOURCE IS USED THE DESIGNATION IS 1. IF THE RESOURCE IS NOT REQUIRED THE DESIGNATION IS 0.

CHECK ALL VALUES OF K FROM START TO PROJECT COMPLETION

CHECK ALL LEVELS OF THE RESOURCE TYPE TO INSURE INCLUSION. CHECK NUMBER & UNITS & EACH RESOURCE ACTUALLY USED. CHECK ALL RESOURCE TYPE TO INSURE INCLUSION.

Flow Chart Sheet 8

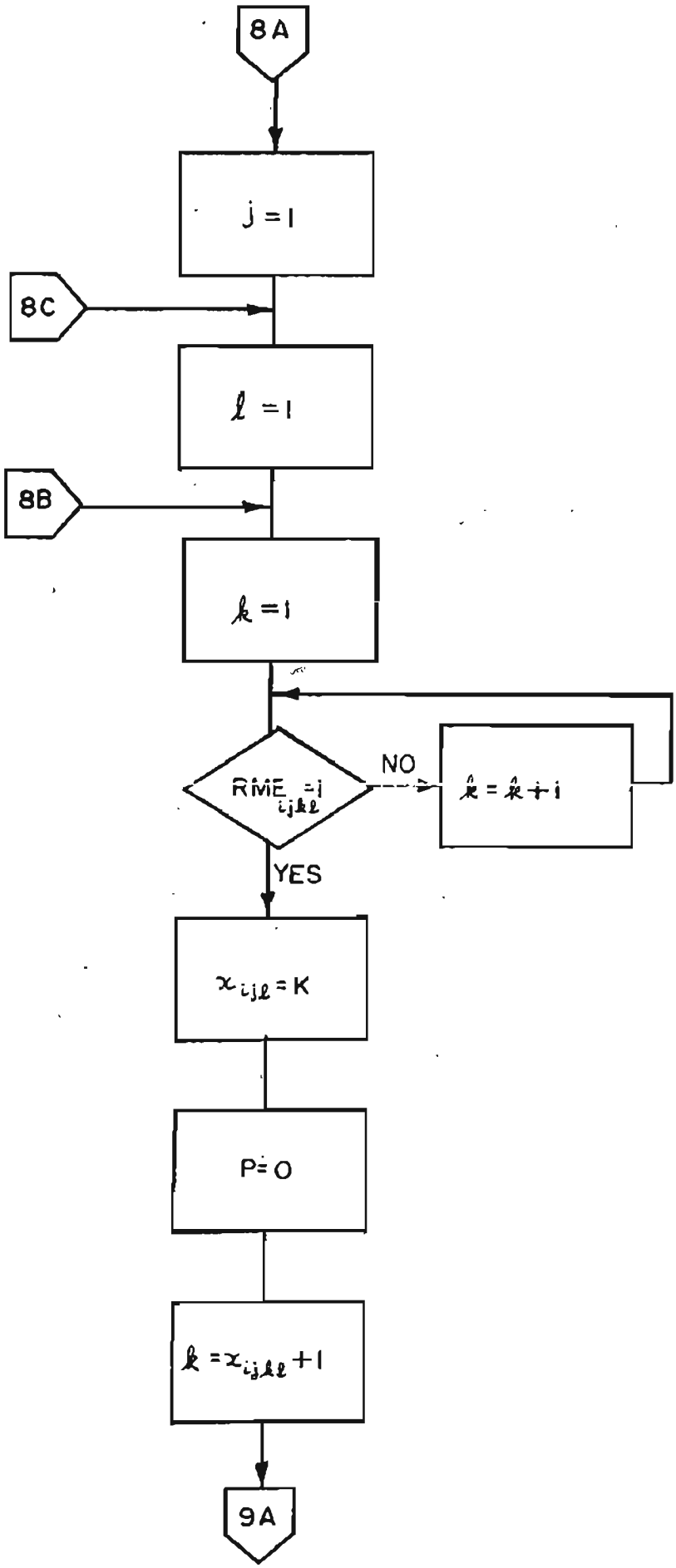

DETERMINE TIME RESOURCE FIRST REQUIRED

INTRIALIZE IDLE TIME COUNTER

Flow Chart Sheet 9

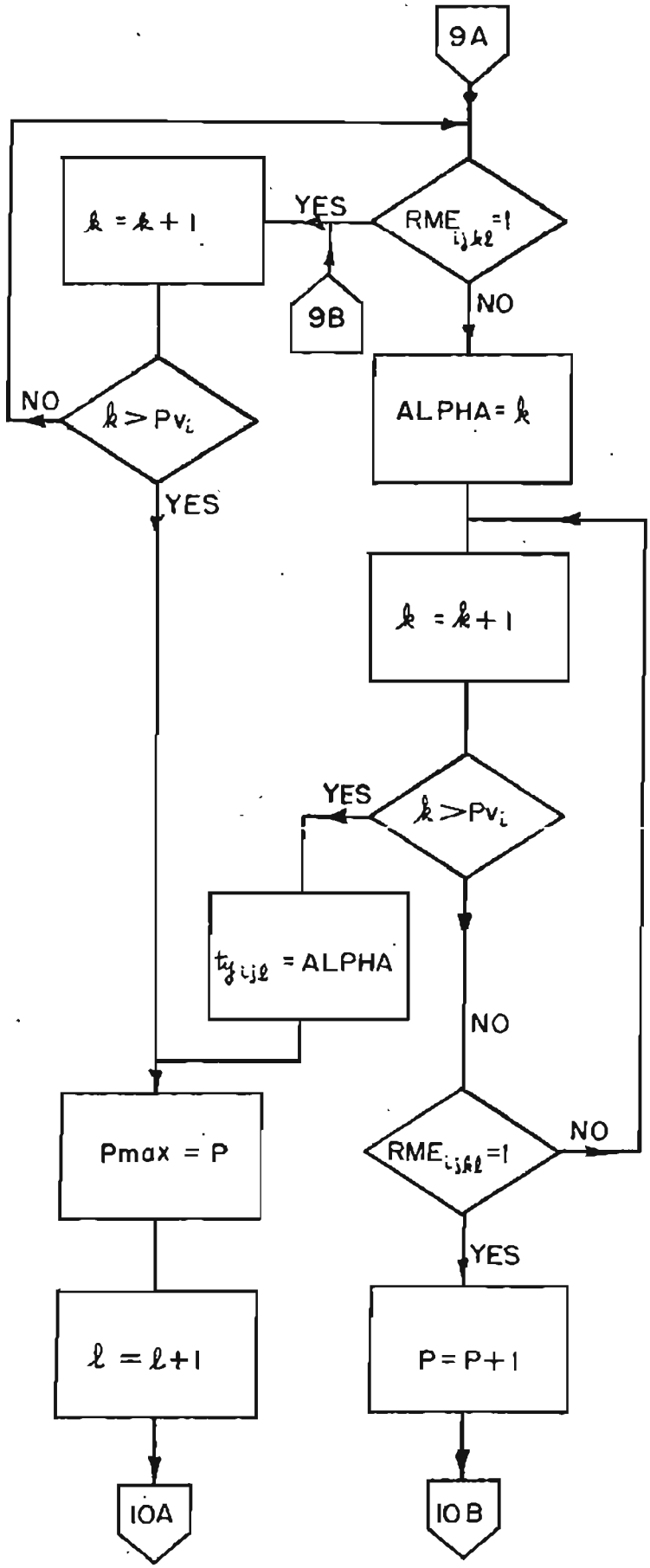

BEGINNING OF AN IDLE TIME PERIOD

CHECK ALL PERIODS OF TIME TO INSURE ALL IDLE PERIOD DETERMINED

Flow Chart Sheet 10

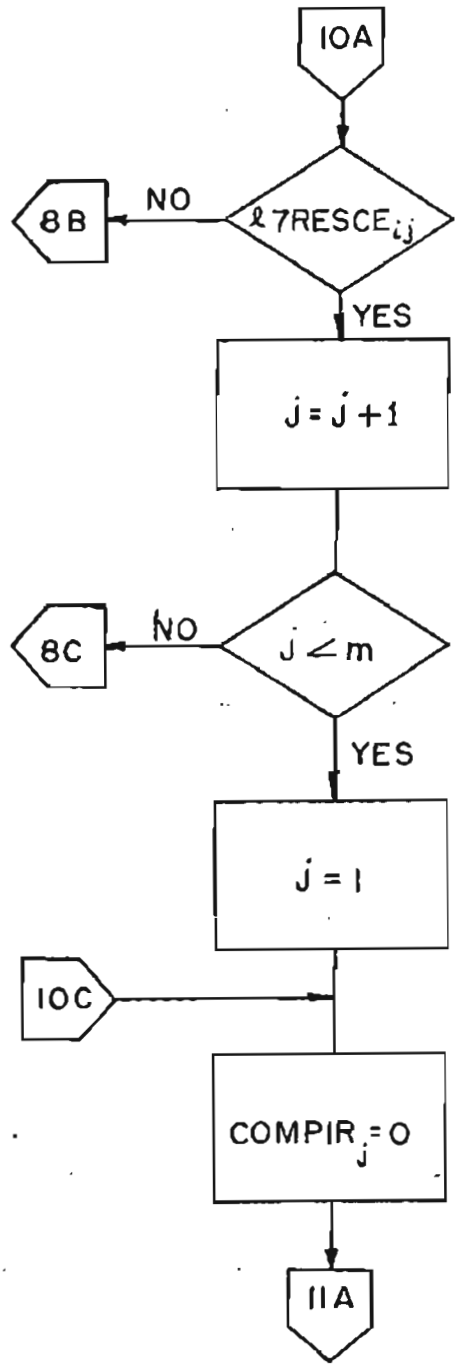

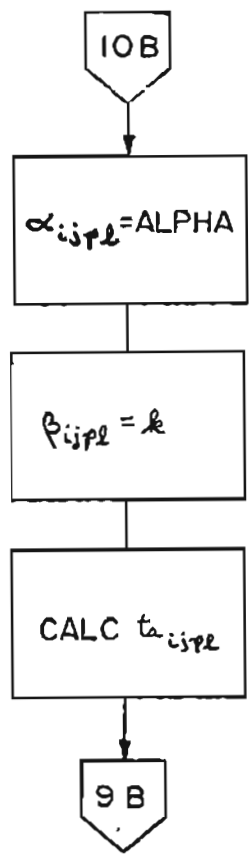

END OF IDLE TIME PERIOD

DURATION OF AN IDLE TIME PERIOD

Flow
Chart Sheet 11

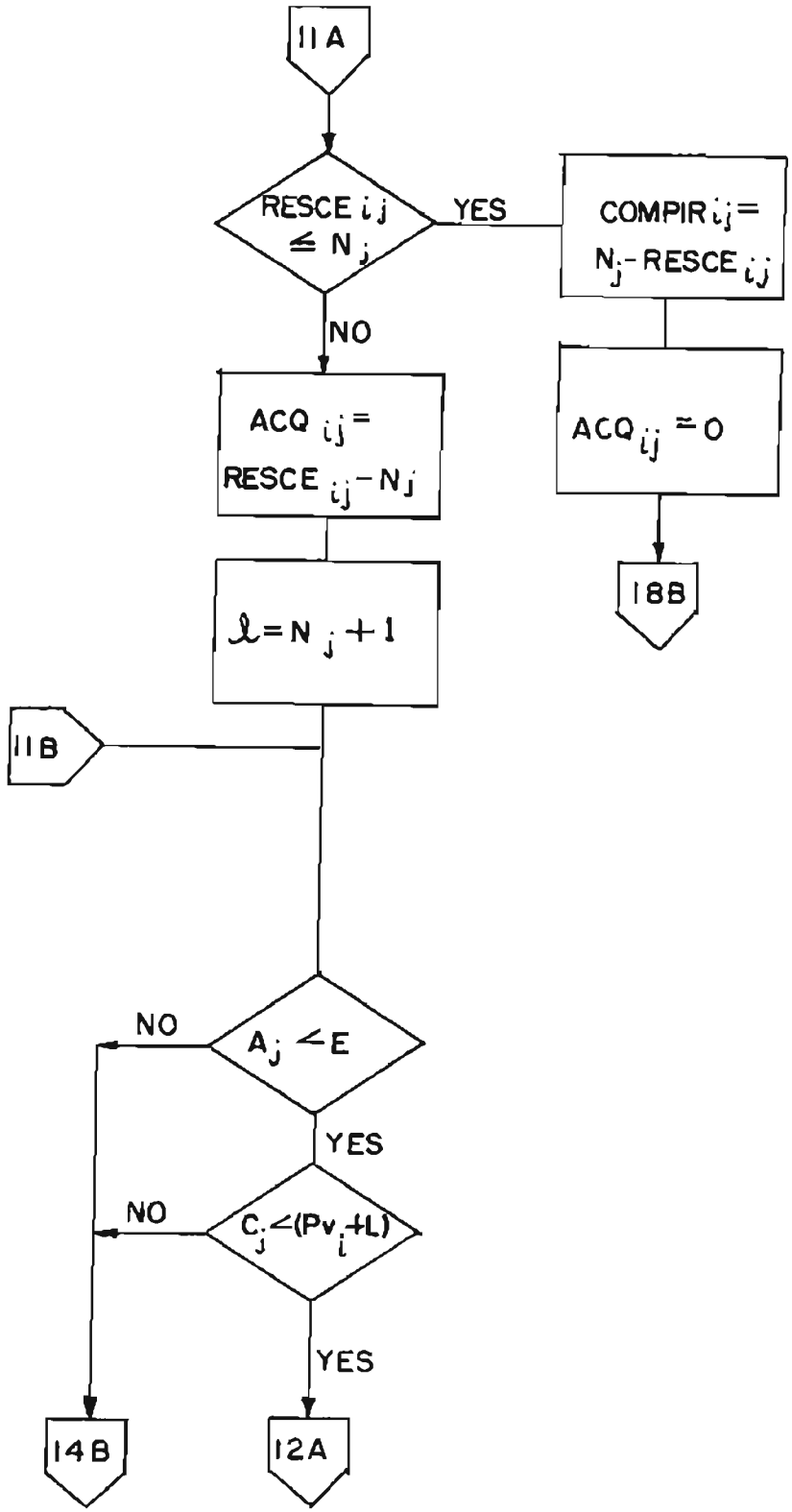

SET FIRST ACQUISITION AT AVAILABLE PLUS ONE LEVEL

CHECK IF PURCHASE COST EXCEEDS INVESTMENT POLICY

CHECK IF ECONOMIC LIFE EXCEEDS THE PROJECT DURATION PLUS AN ALLOWANCE FOR FUTURE PROJECTS

Flow Chart Sheet 12

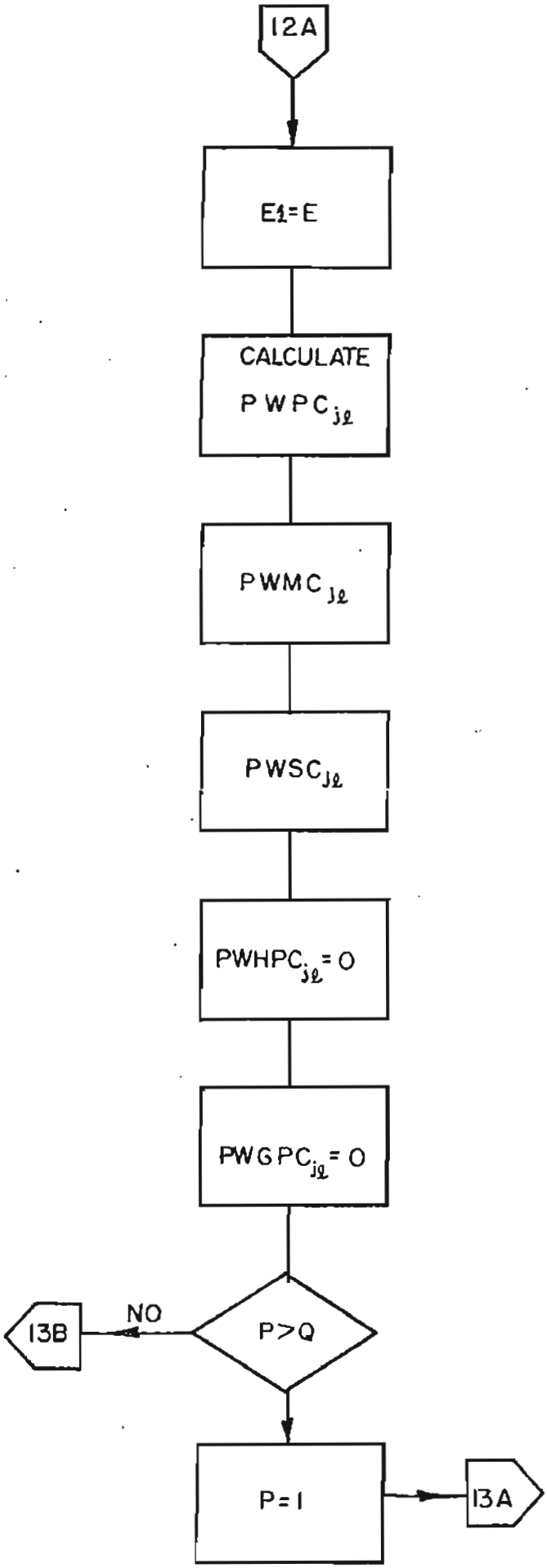

INITIALIZE INVESTMENT POLICY

DETERMINE PRESENT WORTH OF PURCHASE COST

DETERMINE PRESENT WORTH OF MOBILIZATION COST

DETERMINE PRESENT WORTH OF SALVAGE VALUE

INITIALIZE PRESENT WORTH OF OPERATION COST

INITIALIZE PRESENT WORTH OF IDLE TIME COST

DETERMINE IF IDLE TIME EXISTS

Flow Chart Sheet 13

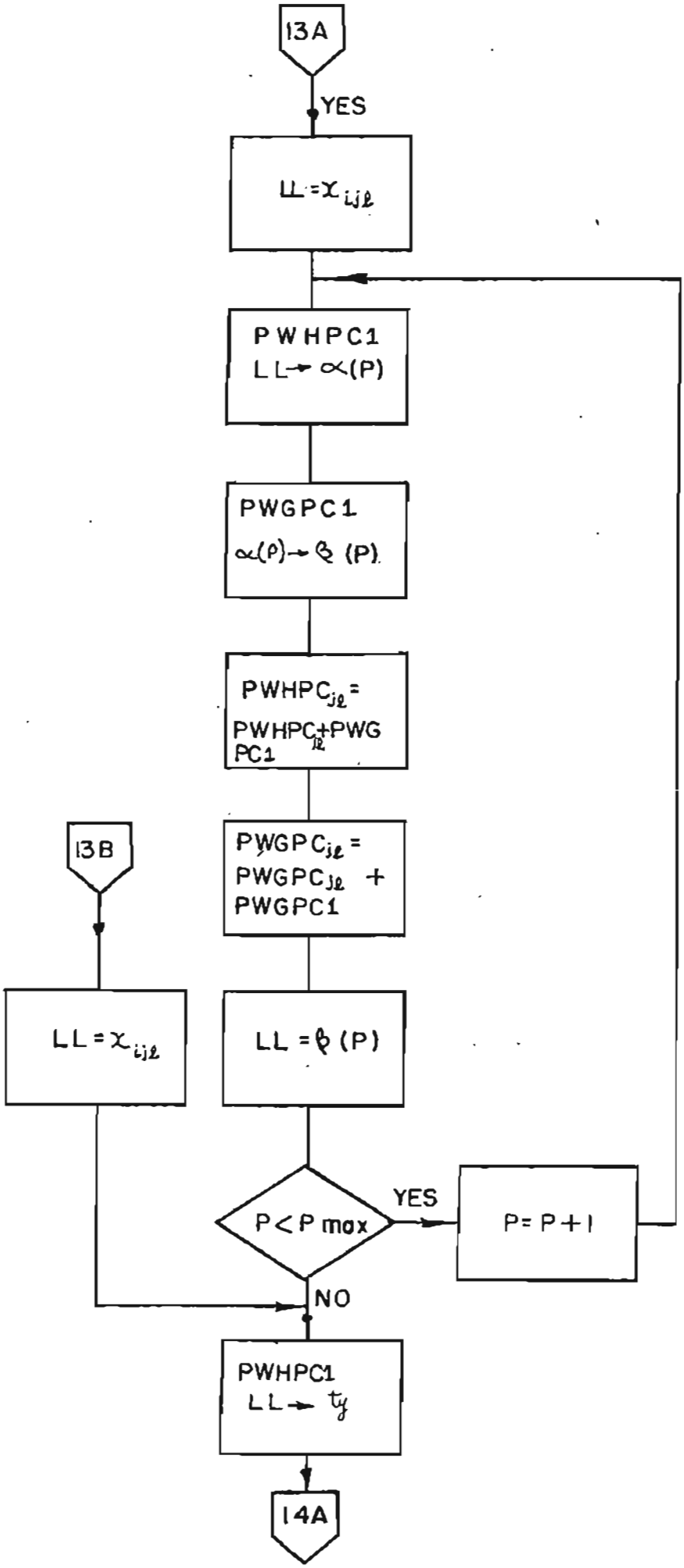

DETERMINE PRESENT WORTH OF OPERATING COST OF FIRST PERIOD

DETERMINE PRESENT WORTH OF IDLE TIME COST OF FIRST IDLE TIME PERIOD

ACCUMULATE PRESENT WORTH OF OPERATING COST

ACCUMULATE PRESENT WORTH OF IDLE TIME COST

CHECK TO INSURE ALL IDLE TIME INCLUDED IN CALCULATIONS

DETERMINE PRESENT WORTH OF OPERATING COST OF LAST WORKING PERIOD

Flow Chart Sheet 14

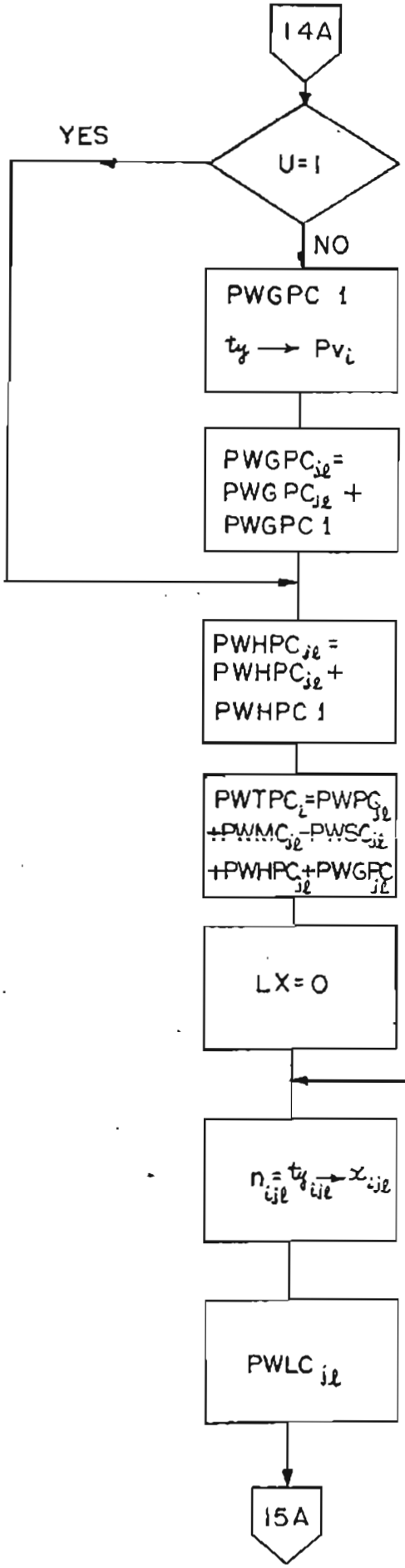

UTILIZATION FACTOR U = 1
EXCLUDE LAST IDLE TIME PERIOD

DETERMINE PRESENT WORTH OF IDLE COST FOR THE PERIOD THE RESOURCE IS NO LONGER REQUIRED

SUMMATION OF PRESENT WORTH OF ALL OPERATING COSTS

PRESENT WORTH OF ALL DIRECT COST ASSOCIATED WITH PURCHASE

FLAG TO INDICATE IF PURCHASE CALCULATIONS WERE BY-PASSED

1 IF BY-PASSED
0 IF NOT BY-PASSED

DETERMINE PRESENT WORTH OF LEASE COST

Flow Chart Sheet 15

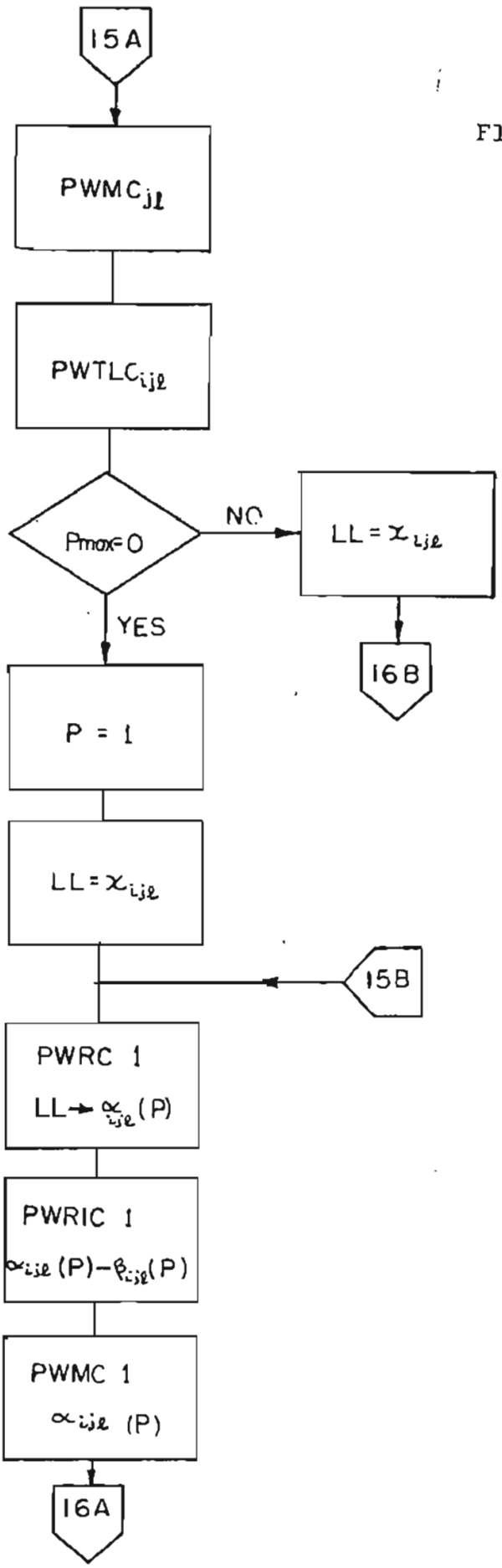

PRESENT WORTH OF MOBILIZATION COST

PRESENT WORTH OF ALL DIRECT COST ASSOCIATED WITH LEASING

PRESENT WORTH OF RENTAL COST DURING FIRST BUSY PERIOD

PRESENT WORTH OF RENTAL DURING IDLE PERIOD

PRESENT WORTH OF MOBILIZATION COST AT BEGINNING OF IDLE PERIOD

Flow Chart Sheet 16

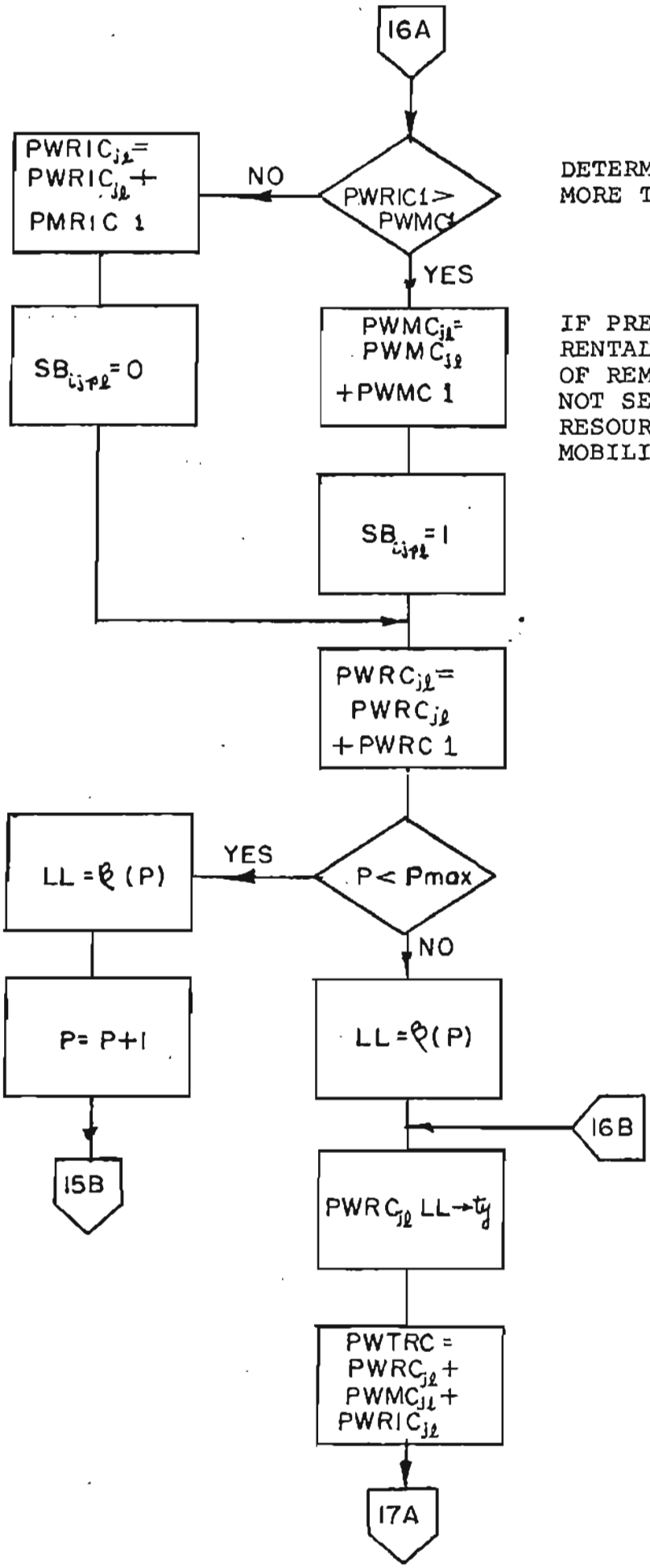

DETERMINE IF RENTAL COST IS MORE THAN MOBILIZATION COST

IF PRESENT WORTH OF IDLE TIME RENTALS IS LESS THAN PRESENT WORTH OF REMOBILIZATION THE RESOURCE IS NOT SENT BACK. IF IT IS MORE THE RESOURCE IS SENT BACK AND RE-MOBILIZATION COSTS ARE INCURRED.

CHECK ALL PERIODS OF IDLE TIME TO DETERMINE IF IT IS BENEFICIAL TO RETURN RESOURCE DURING IDLE PERIOD

PRESENT WORTH OF ALL DIRECT COST ASSOCIATED WITH RENTING

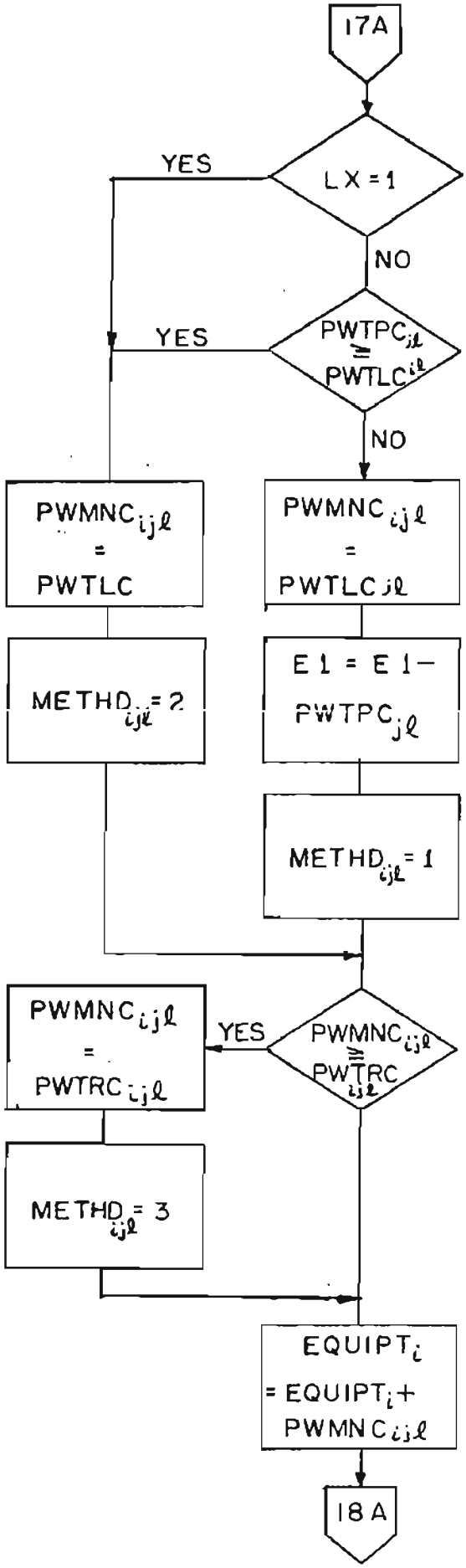

DETERMINATION OF WHICH MODE OF ACQUISITION IS LESS EXPENSIVE

WHEN MODE OF ACQUISITION DETERMINED, ITS COST IS ACCUMULATED WITH THE COST OF ALL LEVELS AND TYPES OF RESOURCES

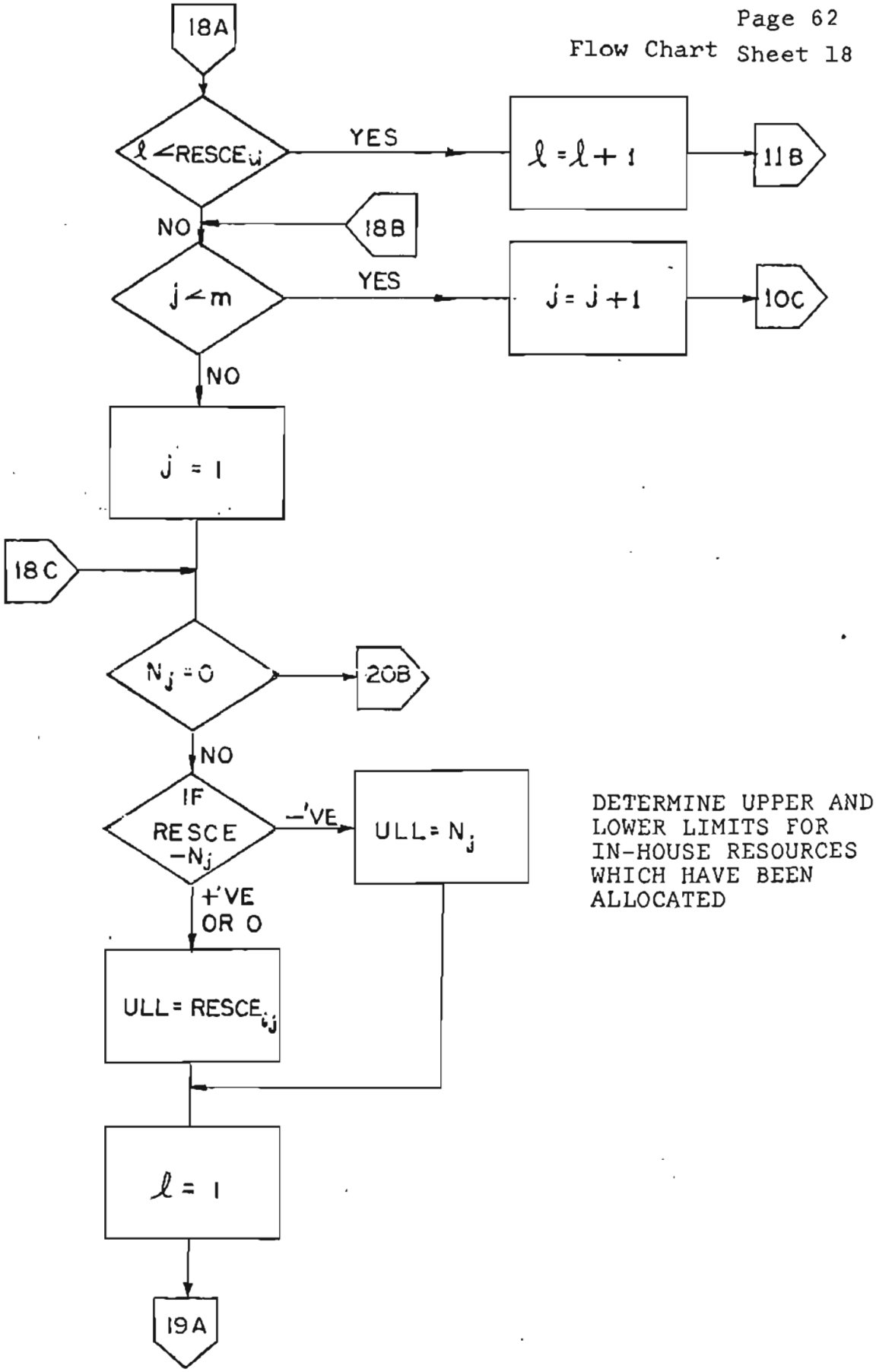

DETERMINE UPPER AND LOWER LIMITS FOR IN-HOUSE RESOURCES WHICH HAVE BEEN ALLOCATED

Flow Chart Sheet 19

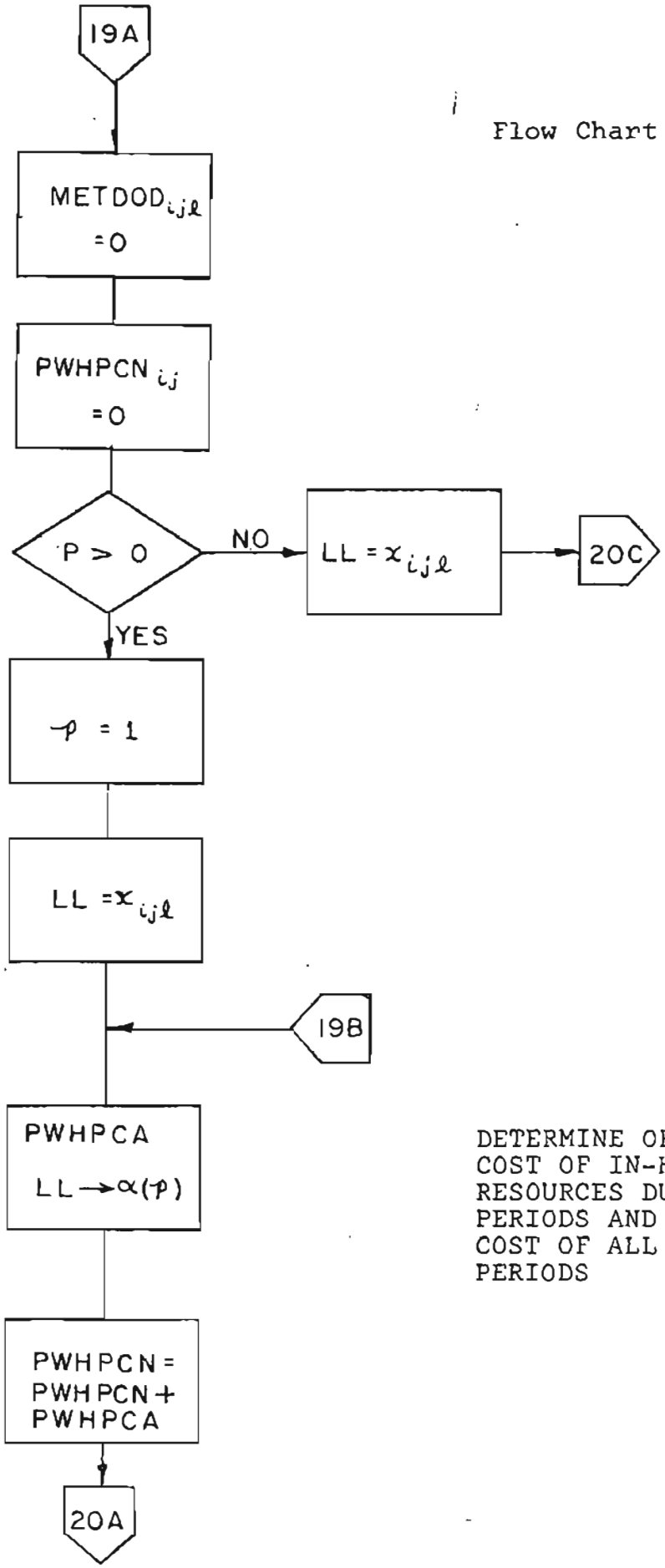

DETERMINE OPERATING COST OF IN-HOUSE RESOURCES DURING BUSY PERIODS AND ACCUMULATE COST OF ALL BUSY PERIODS

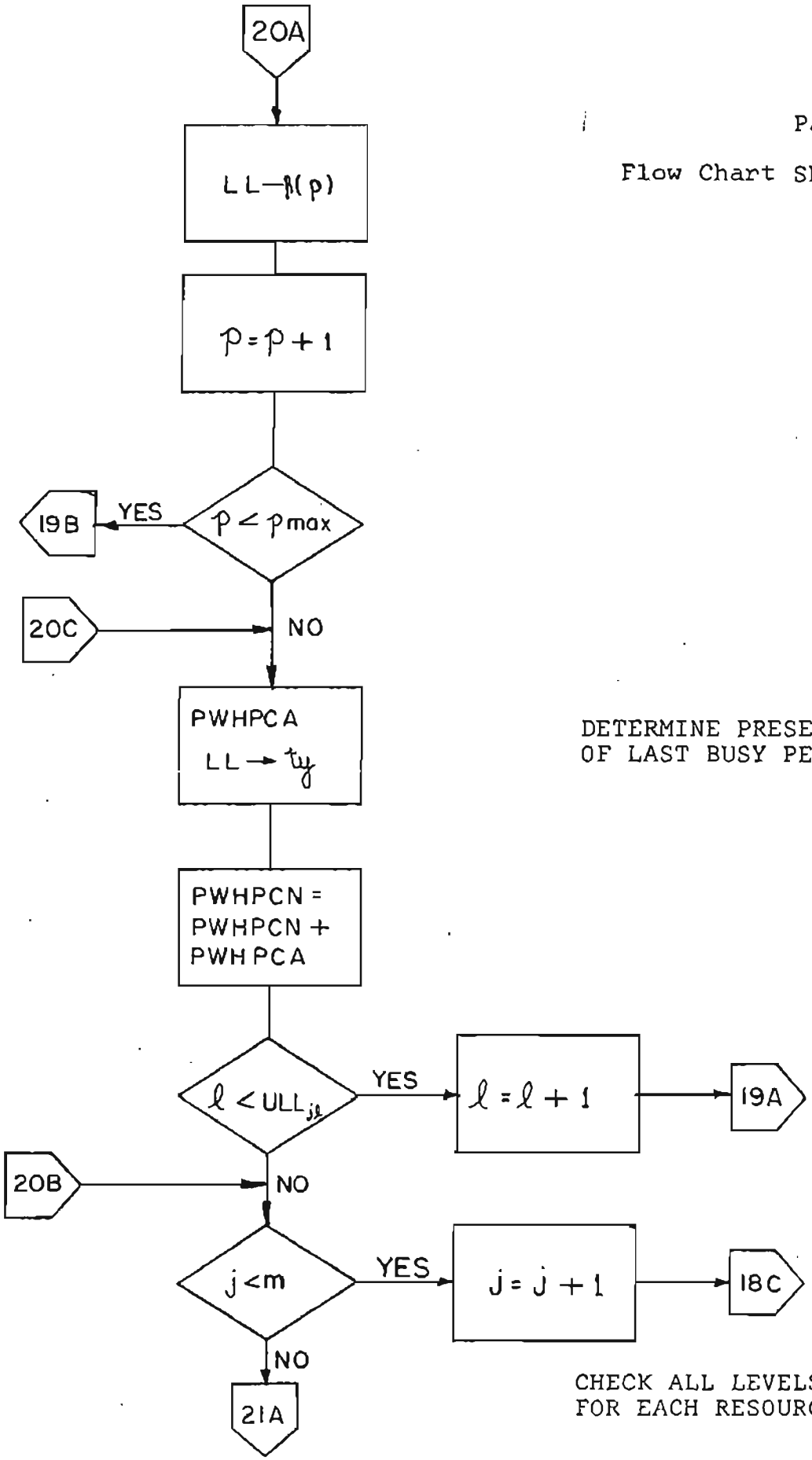

DETERMINE PRESENT WORTH OF LAST BUSY PERIOD

CHECK ALL LEVELS OF ℓ FOR EACH RESOURCE TYPE

Flow Chart Sheet 21

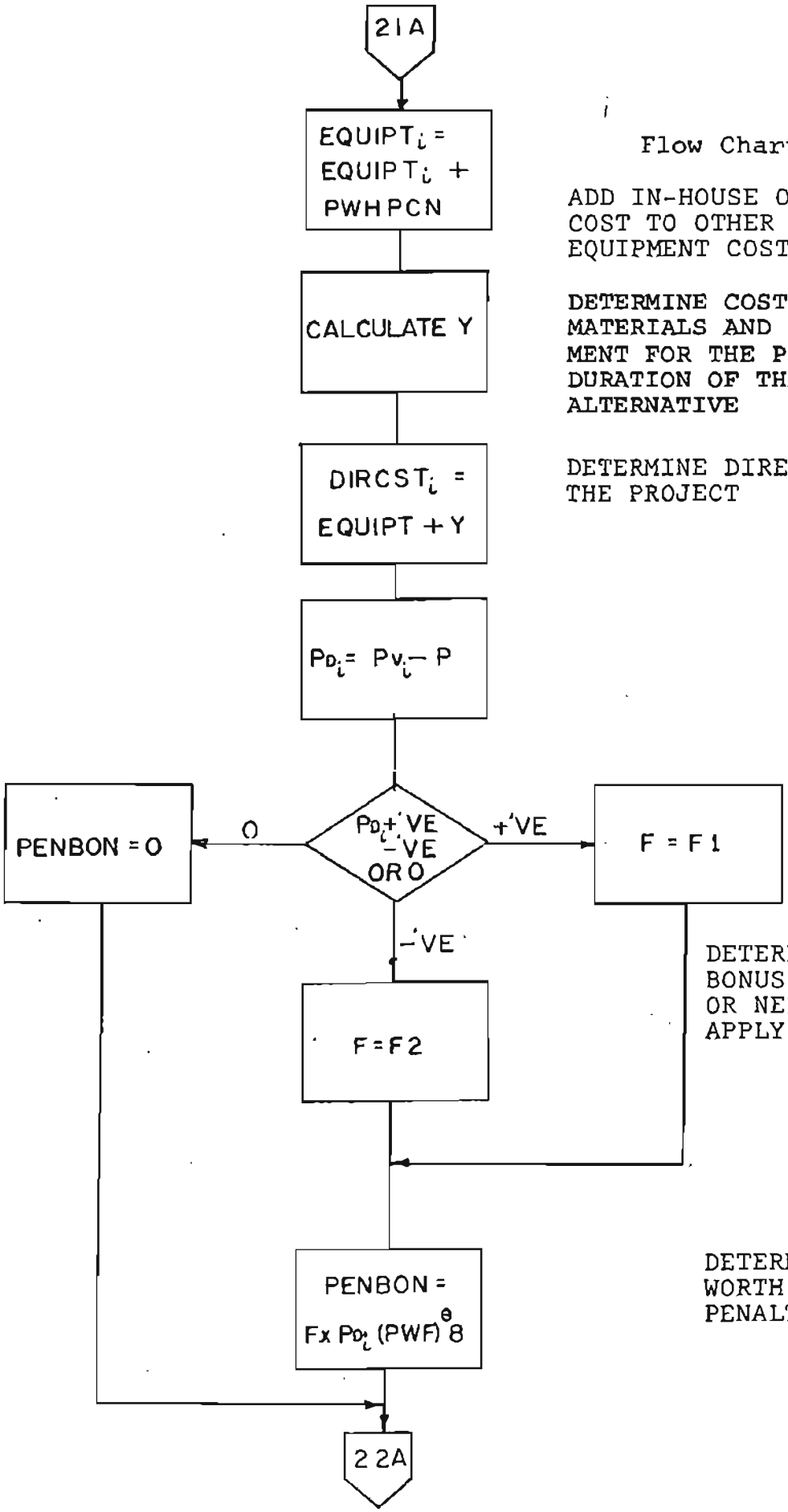

ADD IN-HOUSE OPERATING COST TO OTHER DIRECT EQUIPMENT COST

DETERMINE COSTS OF LABOUR, MATERIALS AND IN-HOUSE EQUIPMENT FOR THE PROJECT DURATION OF THE CURRENT ALTERNATIVE

DETERMINE DIRECT COST OF THE PROJECT

DETERMINE WHETHER BONUS OR PENALTY OR NEITHER IS TO APPLY

DETERMINE PRESENT WORTH OF BONUS/ PENALTY

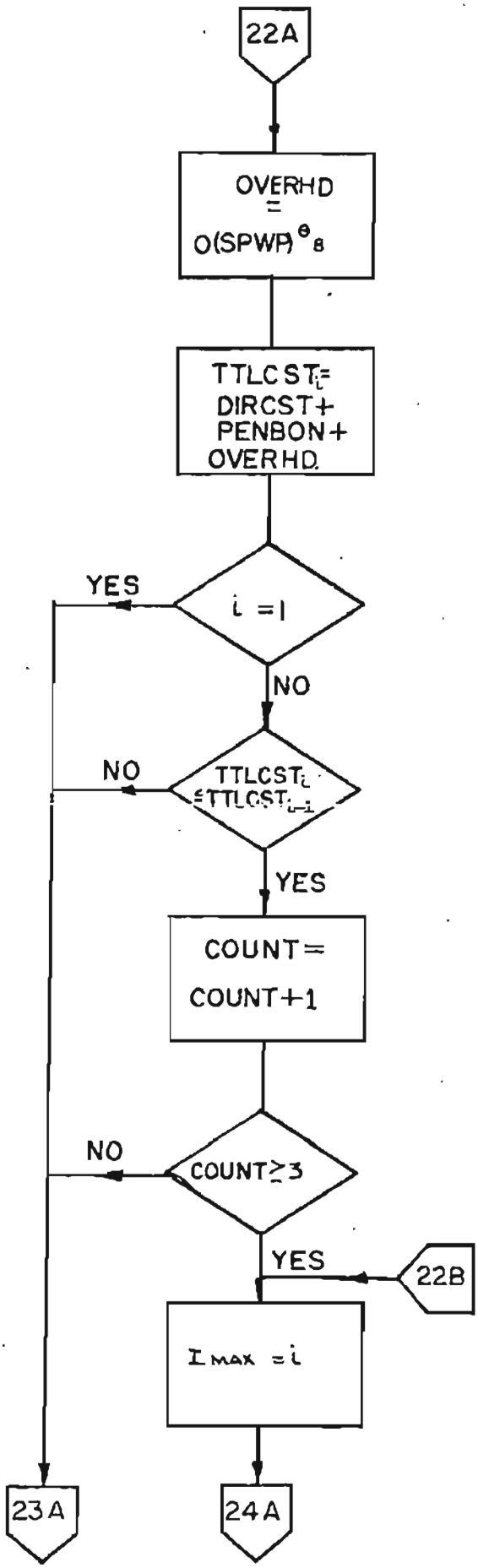

DETERMINE PRESENT WORTH OF OVERHEAD

DETERMINE PRESENT WORTH OF ALL COST AT LEVEL i

COMPARE TOTAL COST OF LEVEL i WITH TOTAL COST OF PREVIOUS LEVEL (i-1)

RECORD THE NUMBER OF INCREASES IN TOTAL COST

CHECK TO DETERMINE IF THREE CONSECUTIVE INCREASES IN TOTAL COST ARE RECORDED

SET THE MAXIMUM NUMBER OF ITERATIONS EQUAL TO i AND INITIALIZE i.

Flow Chart Sheet 23

WHEN i = 1 OR WHEN THREE CONSECUTIVE INCREASES IN TOTAL COST HAVE NOT BEEN RECORDED, i IS INCREMENTED BY ONE, SUBJECT TO PHYSICAL LIMITATION D_j, OF EACH RESOURCE TYPE AND RESOURCES ARE AGAIN ALLOCATED

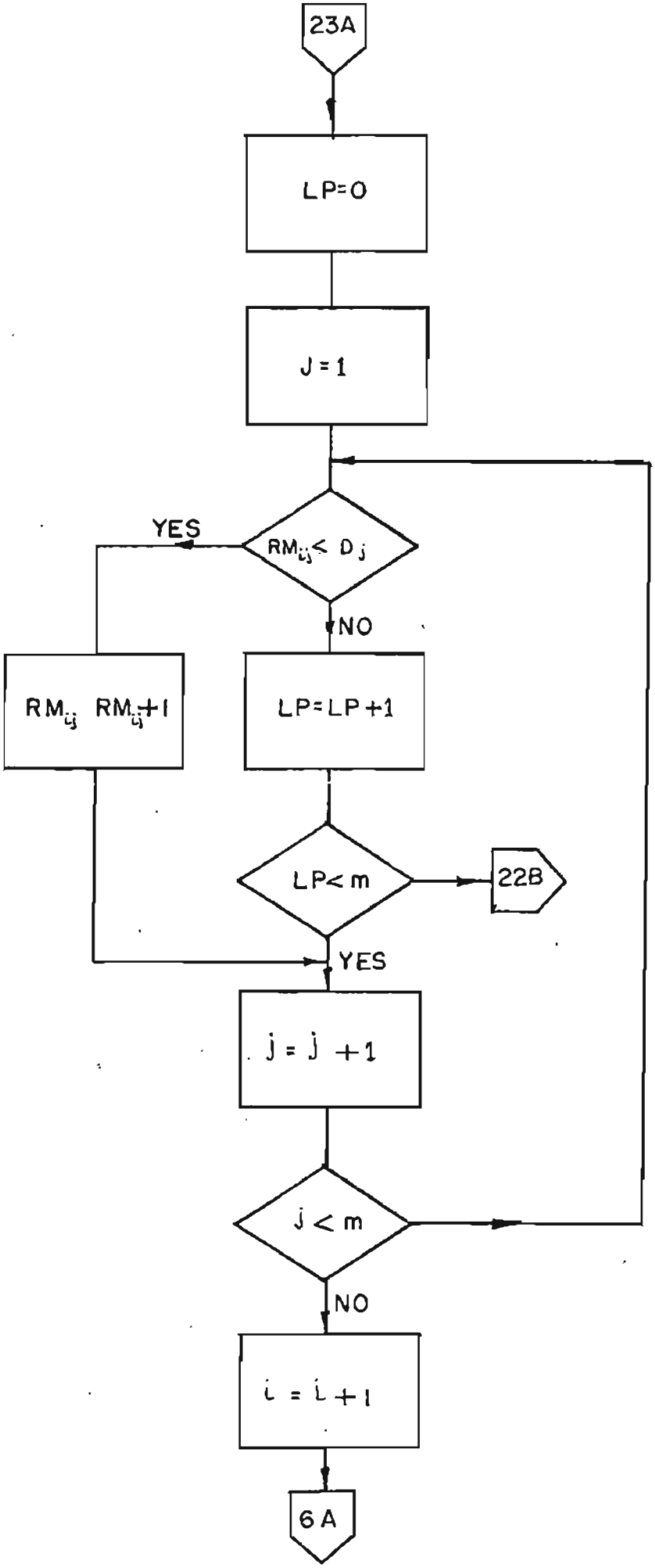

Flow Chart Sheet 24

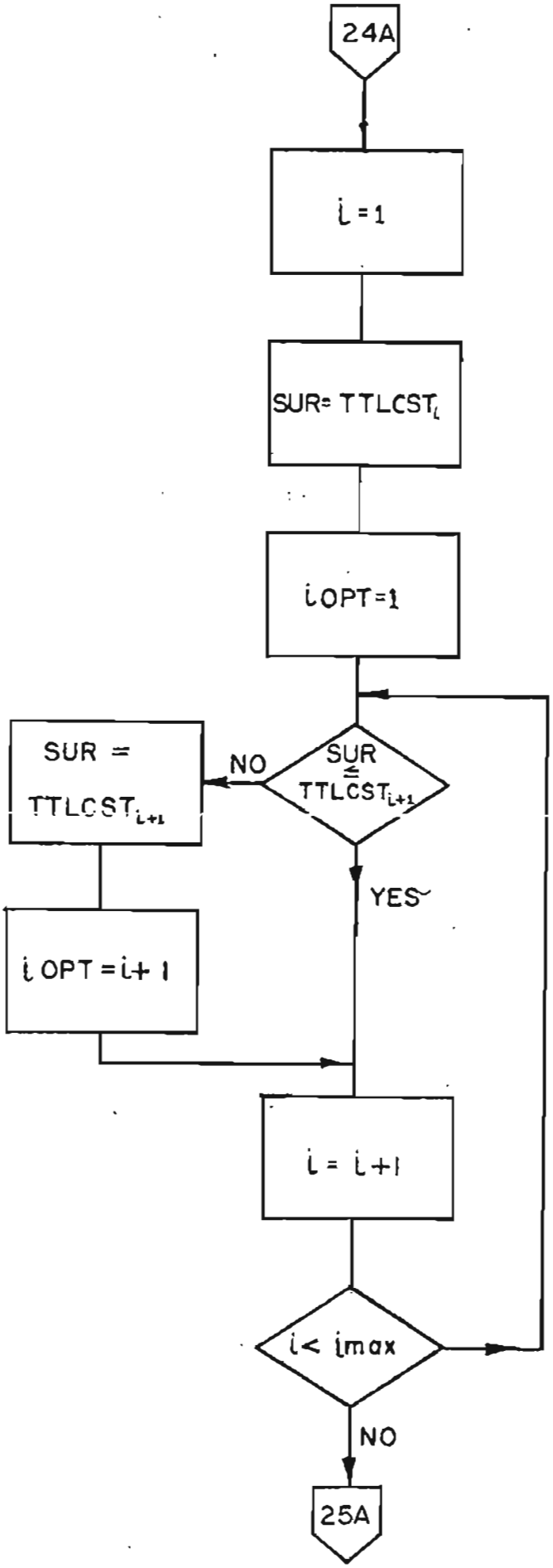

INITIALIZE THE SURVIVOR BY SETTING IT EQUAL TO THE TOTAL COST @ i

INITIALIZE i OPT

COMPARE SURVIVOR WITH TOTAL COST OF NEXT HIGHER LEVEL OF i

COMPARE ALL LEVELS OF i

CHECK TO INSURE ALL LEVELS OF i HAVE BEEN INCLUDED

Flow Chart Sheet 25

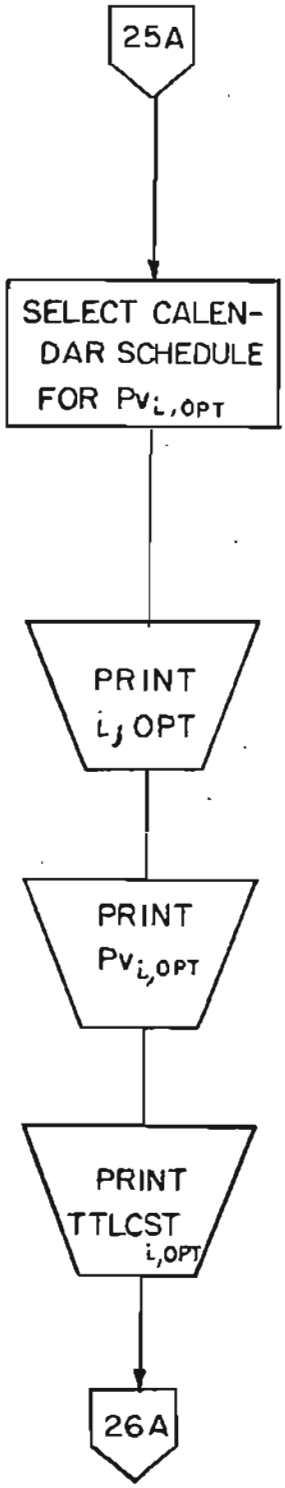

OUTPUTS

OPTIMUM LEVEL OF i

OPTIMUM PROJECT DURATION

TOTAL COST ASSOCIATED WITH OPTIMUM

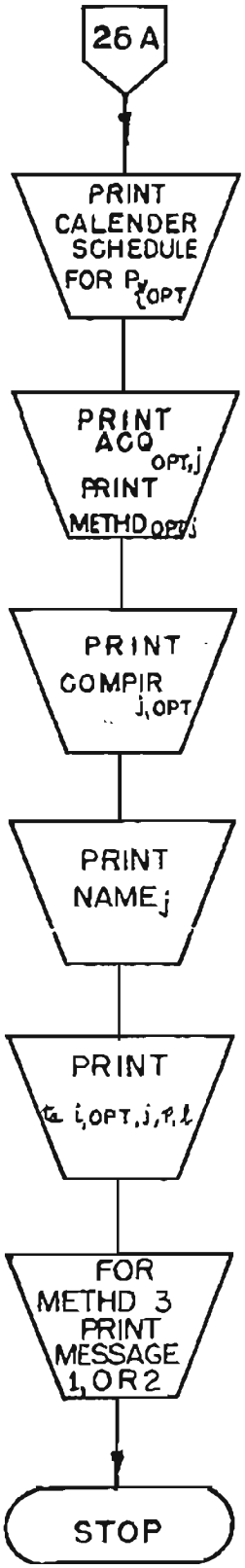

CALENDAR SCHEDULE ASSOCIATED WITH $Pv_{i,opt}$

THE NUMBER OF ACQUISITIONS REQUIRED AND THE CORRESPONDING METHOD OF ACQUISITION

THE NUMBER AND TYPE OF EACH RESOURCE WHEN IT IS COMPLETELY IDLE

NAME OF EACH RESOURCE TYPE

THE NUMBER AND TYPE OF EACH RESOURCE SHOWING ITS PERIODS OF IDLE TIME

WHEN RENTING, A MESSAGE IS PROVIDED WHETHER OR NOT THE RESOURCE IS KEPT ON SITE OR RETURNED.

Summary

Resources have been allocated in the first instance at the minimum level permissible to complete the project. Resource levels have been incremented by one, with each resource type being limited by its own physical limitation. All levels have been investigated and costs calculated for each level. The practically optimum resource level has been obtained, mode of acquisition selected and total project cost determined, producing the practically optimum profit for a contractor.

In Chapter IV following, a manually worked example is presented, demonstrating the effectiveness of the methodology.

TABLE OF CONTENTS

Chapter IV (EXAMPLE)

Preamble	73
Fig. 4-1 Network Diagram	74
Table 4-1 Resource Allocation Data	75
Table 4-2 Input Data	76
Explanation of i = 1 level (first iteration)	77
Table 4-3 Resource Data i = 1	77
Fig. 4-2 Time Resource Usage Table i = 1	80
Table 4-4 Summary of Calculation i = 1	82
Table 4-5 Summary of Cost i = 1	83
Explanation of i = 2 level (second iteration)	84
Table 4-6 Resource Data i = 2	84
Fig. 4-3 Time Resource Usage Table i = 2	87
Table 4-7 Summary of Calculation i = 2	89
Table 4-8 Summary of Cost i = 2	91
Explanation of i = 3 level (third iteration)	92
Table 4-9 Resource Data i = 3	92
Fig. 4-4 Time Resource Usage Table i = 3	94
Table 4-10 Summary of Calculations i = 3	96
Table 4-11 Summary of Cost i = 3	98
Explanation of i = 4 level (fourth iteration)	99
Table 4-12 Resource Data i = 4	99
Fig. 4-5 Time Resource Usage Table i = 4	101
Table 4-13 Summary of Calculations i = 4	103
Table 4-14 Summary of Cost i = 4	104
Table 4-15 Summary of Costs and Project Duration	105
Fig. 4-6 Project Cost vs Time Element Graph	107
Summary	108
Table 4-16 Table of Resource - Optimum Level, Number & Mode of Acquisition	109
Table 4-17 Table of Idle Times	110

CHAPTER IV

Example

In order to demonstrate the model developed in Chapter III, a fifteen activity, eleven node network (Fig. 4-1) is used to demonstrate a hypothetical construction project. Seven different resource types are used. Their types and pertinent economic data affiliated with each resource type and with the project as a whole is shown in the input data table (Table 4-2).

For each iteration i, a table of resources to be used, is shown along with an explanation, followed by the applicable time resource usage table which in turn is followed by a table comparing all computations for that level.

After determining resource usage for each iteration, a summary of costs and project durations is shown in Table 4-15, from which the project cost vs project duration graph (Fig. 4-6) is plotted. As a result, minimum cost solution is suggested.

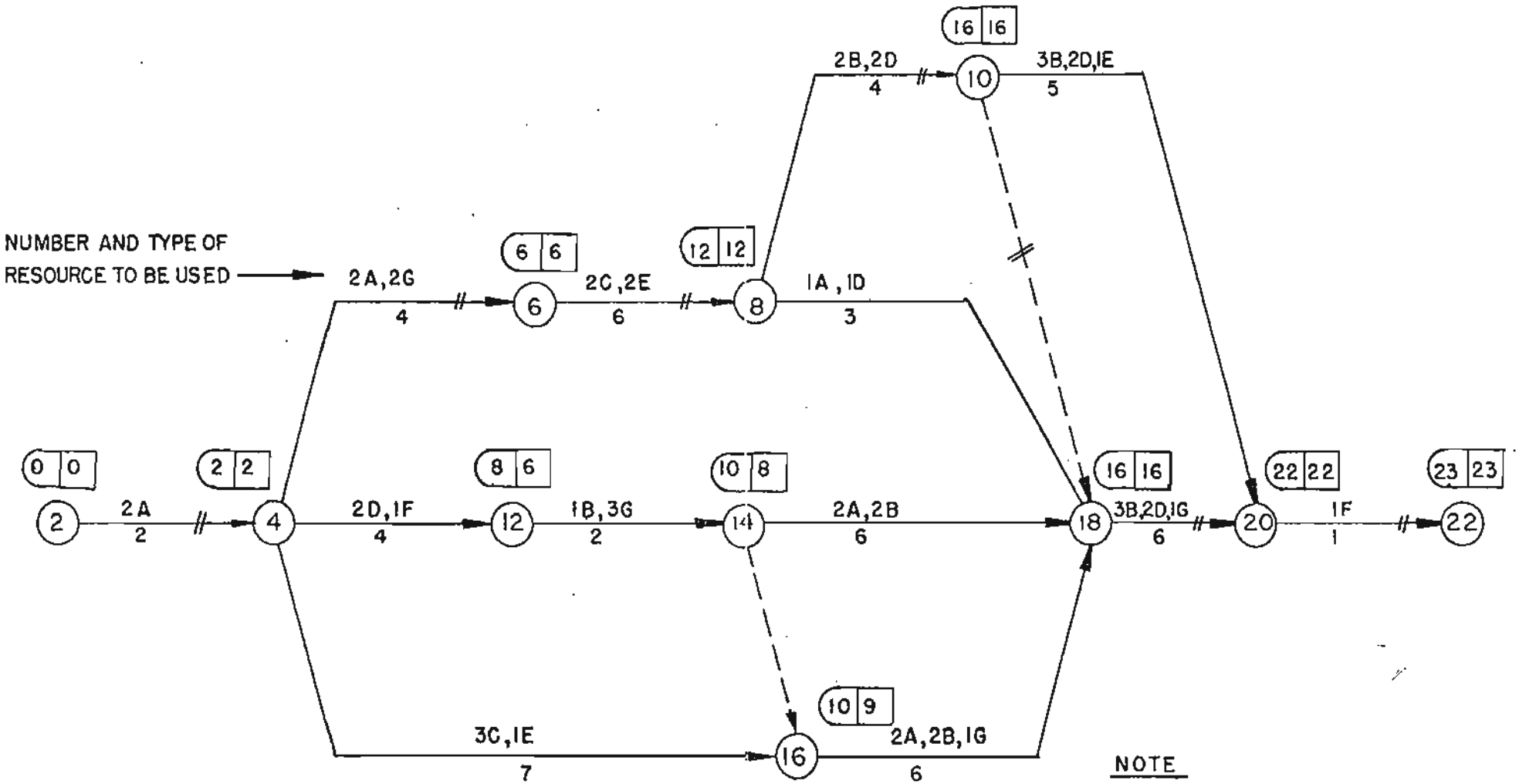

NOTE

A	TYPE	RESOURCE	IS	J=1
B	"	"	IS	J=2
C	"	"	IS	J=3
D	"	"	IS	J=4
E	"	"	IS	J=5
F	"	"	IS	J=6
G	"	"	IS	J=7

NETWORK DIAGRAM

FIG. 4—1

RESOURCE ALLOCATION DATA

Table 4-1

i-j	DUR/MO	NO RES REQ'D	RES DEMAND/MO	E.S.	L.S.	TOTAL FLOAT
2-4	2	2A	4A	0	0	0
4-6	4	2A,2G	8A,8G	2	2	0
4-12	4	2D,1F	8D,4F	2	4	2
4-16	7	3C,1E	21C,7E	2	3	1
6-8	6	2C,2E	12C,12E	6	6	0
8-10	4	2B,2D	8B, 8D	12	12	0
8-18	3	1A, 1D	3A,3D	12	13	1
10-18	0	0	0	16	16	0
10-20	5	3B,2D,1E	15B,10D, 5E	16	17	1
12-14	2	1B,3G	2B,6G	6	8	2
14-16	0	0	0	8	9	1
14-18	6	2A,2B	12A,12B	8	10	2
16-18	6	2A,2B,1G	12A,12B,6G	9	10	1
18-20	6	3B,2D,1G	18B,12D,6G	16	16	0
20-22	1	1F	1F	22	22	0

TABLE 4-2 - INPUT DATA

Resource Type J and Symbol		Name J	Available N_j	Min. No Required V_j	Physical Limitation D_j	Economic Life C_j Yrs	Utilization Code U_j	Capital Cost($) A_j	Rental Rate($) B_j/mo	Lease Rate($) T_j/mo	Salvage Value ($) J_j	Depreciation Benefit ($) Z_j	Mobilization Cost ($) M_j	Operation Cost Rate($) H_j/mo	Idle Time Cost Rate($) G_j/mo	Time Allowance Future Projects L_j
1	A	Truck*	4	2	7	1	0	6,000	1,000	1,000	1,000	1,500	200	400	300	0
2	B	Backhoe	2	3	6	3	0	25,000	4,000	3,500	5,000	6,000	500	2,000	1,000	0
3	C	Compressor	2	3	4	3	1	12,000	2,000	2,000	5,000	3,000	300	1,000	600	0
4	D	Air Track*	2	2	5	2	1	16,000	2,500	2,000	4,000	4,000	300	1,000	700	0
5	E	10-T Crane*	3	2	3	2	0	40,000	3,500	3,000	15,000	9,000	1,000	1,500	900	0
6	F	20-T Crane*	1	1	2	2	1	60,000	4,000	3,500	20,000	15,000	1,000	2,000	1,000	0
7	G	D-9 Dozer*	2	3	5	2	0	90,000	9,000	8,000	40,000	20,000	800	4,000	3,000	0

I = 10% per annum

Y = $300,000 total

F_1 = $2,000/month

F_2 = $10,000/month

O = $1,500/month

CF = 12

E = $70,000

P = 28 months

* Indicates that equipment being considered for purchase is "second-hand" and the economic life shown is the balance of the equipments' economic life at the time of purchase.

U_j Utilization Code - If code is 1 the resource can be used continuously and effectively on other projects. If code is zero the resource cannot be used on other projects.

Explanation of i = 1 level (first instance)

Fig. 4-1 presents a hypothetical project network arrow diagram consisting of sixteen activities and eleven node. The critical path is noted from nodes 2 - 4 - 6 - 8 - 10 - 18 - 20 - 22.

Table 4-1 presents the data required for resource allocation.

Table 4-2 presents the inputs as previously described in the detail flow chart of Chapter III. Since the construction organization does not anticipate future work beyond the project duration, using this equipment, L_j will be taken as zero. The minimum number of each type of resource (V_j) that can be used in order to complete the project, and from Table 4-2 the available number of each type of resource N_j.

RESOURCE DATA i = 1
TABLE 4-3

J	RESOURCE NAME	V_j	(RM_{ij})	N_j	D_j	ACQUISITION REQ'D
1	Truck	2	2	4	7	No
2	Backhoe	3	3	2	6	Yes (1)
3	Compressore	3	3	2	4	Yes (1)
4	Air Track	2	2	2	5	No
5	10-T Crane	2	2	3	3	No
6	20-T Crane	1	1	1	2	No
7	D-9 Dozer	3	3	2	5	Yes (1)

In order to allocate resources, the minimum level (V_j) is

required and, therefore, one backhoe, one compressor and one D-9 dozer has to be acquired. This is shown in Table 4-3. Resources are allocated at the RM_{1j} level and from the allocation Fig. 4-2 (Time Resource Usage Table) is derived. From Fig. 4-2 the times each resource is required, the times the resources are no longer required, the number and length of idle periods, and the project duration can be obtained. It is noted that in this iteration no resource is restricted because of physical limitation (D_j).

Now knowing the time requirements of each resource, and having the input data of Table 4-2, the cost of each method of acquisition for J = 2, 3 and 7 is calculated and shown in Table 4-4. The summation of cost for i = 1 is presented in Table 4-5. A study of this table and table 4-4 shows that it is more economical to purchase resources j = 2 (backhoe), and resource J = 3 (compressor) and lease resource J = 7 (D-9 Dozer). The cost of doing this is $44,702. To this is added the cost of operating in-house equipment for a total $EQUIPT_i$ cost of $277,825. The direct cost of the project ($DIRCST_i$) is calculated and a penalty for delay (project duration is 39 months whereas specified completion was 28 months) and overhead is calculated and these costs are added to the equipment cost to obtain a

total cost of the entire project ($TTLCST_i$) of $587,422.

This value is recorded for comparison with other levels of resources.

It is to be noted that both the backhoe and the compressor can be utilized effectively on projects other than the one in question. Therefore, the cost to this project when considering purchases, is only that portion when the equipment is on the project.

It can also be noted that acquisition by purchase cannot be entertained for the D-9 Dozer because its purchase cost exceeds the investment policy.

TIME RESOURCE USAGE TABLE

$i = 1$

FIG. 4–2

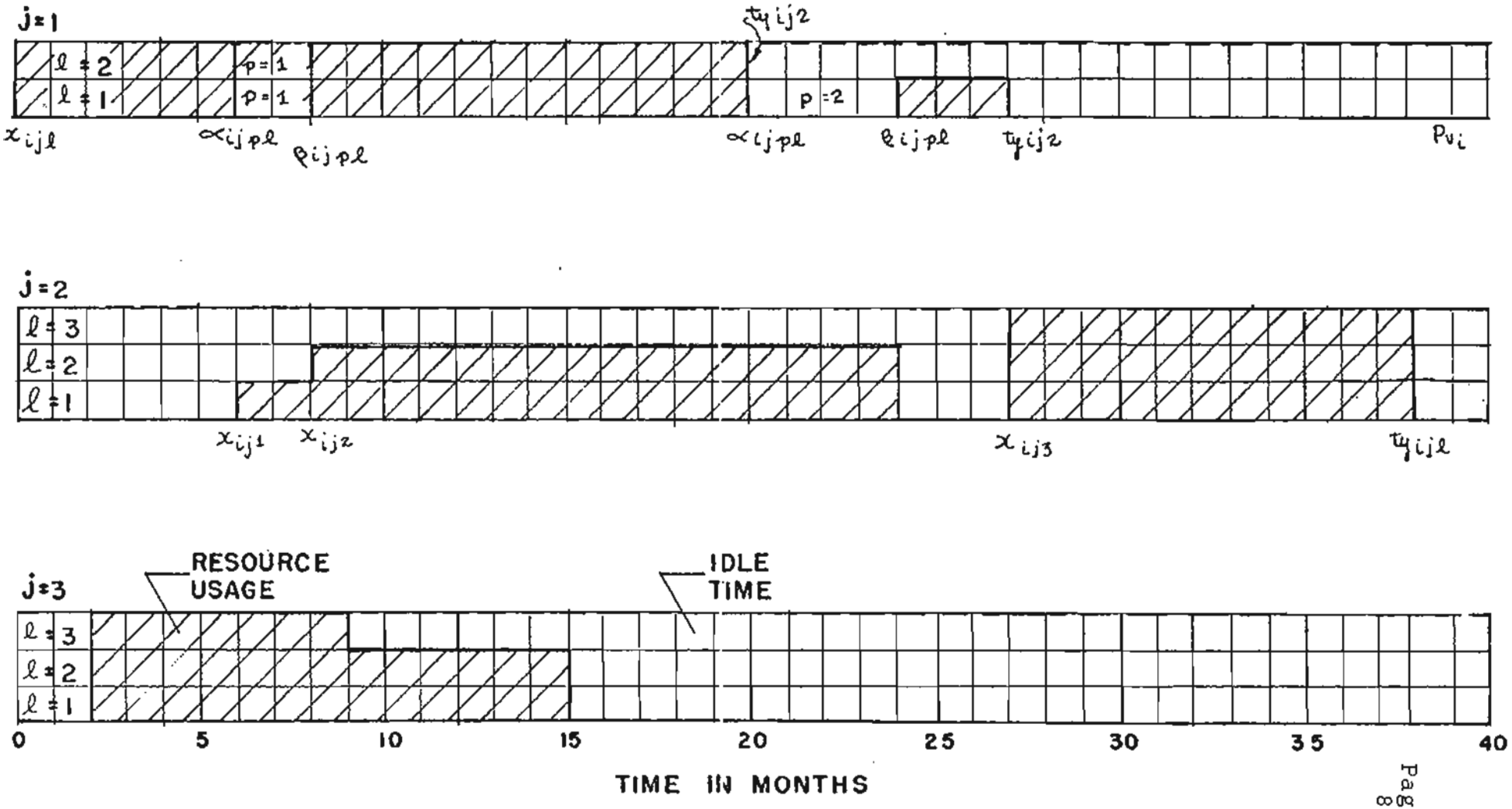

TIME RESOURCE USAGE TABLE

$i = 1$

FIG. 4-2 CONT'D

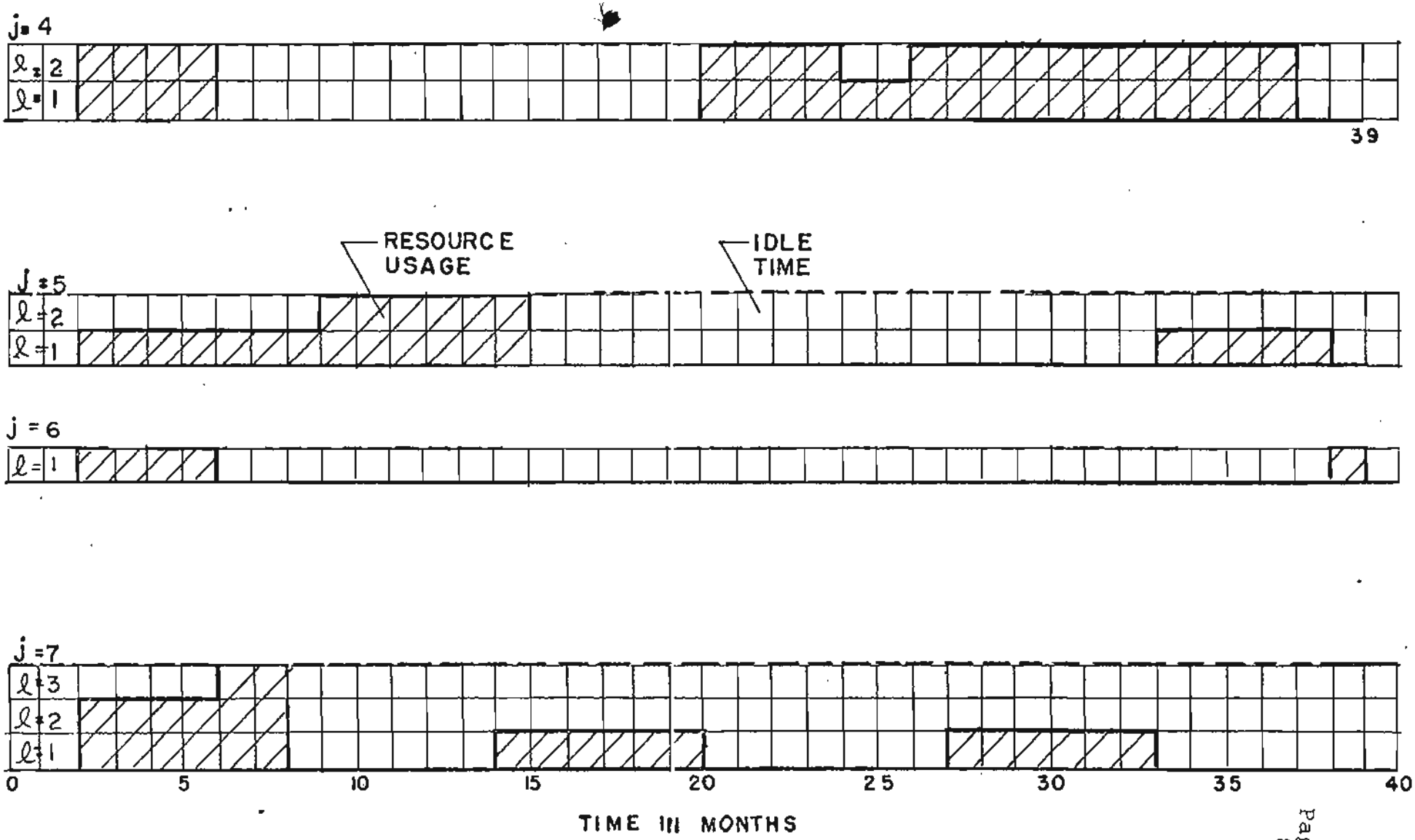

SUMMARY OF CALCULATION

i = 1 Table 4-4

RESOURCE TYPE	J=1	J=2	J=3	J=4	J=5	J=6	J=7
ℓ	-	3	3	-	-	-	3
$C_j < PV_i$	-	Yes	Yes	-	-	-	Yes
$A_j < E$	-	Yes	Yes	-	-	-	No
$PWPC_j$	-	4,496	1,118	-	-	-	-
$PWMC_j$	-	403	295	-	-	-	762
$PWHC_j$	-	16,154	6,368	-	-	-	-
$PWGPC_{j\ell}$	-	703	-	-	-	-	-
$PWTPC_{ij\ell}$	-	21,756	7,781	-	-	-	-
$PWLC_{j\ell}$	-	28,271	12,736	-	-	-	14,403
$PWTCL_{ij\ell}$	-	28,674	13,031	-	-	-	15,165
$PWRC_{j\ell}$	-	32,309	12,736	-	-	-	16,203
$PWTRC_{ij\ell}$	-	32,712	13,031	-	-	-	16,965
$PWMINC_{ij\ell}$	-	21,756	7,781	-	-	-	15,165
$METHOD_{ij\ell}$	-	1	1	-	-	-	2
$PWHPCN_{ij}$	13,605	43,128	23,214	31,601	30,566	8,729	82,280
$EQUIPT_j$	13,605	78,489	109,484	141,085	171,651	180,380	277,825

SUMMARY OF COST

$i = 1$

TABLE 4-5

PROJECT DURATION (Pv_i)	39 months
IN HOUSE OPERATING COSTS ($PWHPCN_i$)	233,123
EQUIPMENT COSTS ($EQUIPT_i$)	277,825
JOB OVERHEAD ($OVERHD_i$)	47,938
BONUS-PENALTY ($PENBON_i$)	16,138
OTHER PROJECT COSTS (Y)	245,321
TOTAL COMBINED COSTS ($TTLCST_i$)	587,422

Explanation of i = 2 Level (second iteration)

The project cost using the minimum level of resource has now been calculated and recorded. All resources that are not constrained by physical limitations are now incremented by one. These are the RM_{ij} level of resources where i = 2.

RESOURCE DATA i = 2
TABLE 4-6

J	RESOURCE NAME	RM_{ij}	N_j	D_j	ACQUISITION INVESTIGATED
1	Truck	3	4	7	No
2	Backhoe	4	2	6	Yes (2)
3	Compressor	4	2	4	Yes (2)
4	Air Track	3	2	5	Yes (1)
5	10-T Crane	3	3	3	No
6	20-T Crane	2	1	2	Yes (1)
7	D-9 Dozer	4	2	5	Yes (2)

It is noted that acquisitions are not required for j = 1 and j = 5. For all other resource types either one or two acquisitions may be required.

Resource allocation is carried out using resources at RM_{2j} level and from the allocation the time resource usage tables are obtained (Fig. 4-3). From this table all time elements of all resources are available. The

project duration has now decreased from 39 months to 32 months at the expense of additional resources. The method of acquisition is now determined and the cost involved is presented in Table 4-7. It is noted that for $J = 2$ and $J = 3$, the economic life C_j is not less than the project duration plus allowance for future projects, and that for $J = 7$ the capital cost of the resource (A) exceeds the investment policy (E), and, therefore, acquisition by means of purchase cannot be entertained.

It is also to be noted that the 4th compressor, the 3rd 10-T crane, the 2nd 20-T crane and the 4th D-9 dozer, although available for allocation and not restricted by physical conditions, cannot be utilized at any time on the project. The resource allocation program supplies this information and, consequently, no calculations of costs will be made and neither method of acquisition will be considered.

The minimum cost of acquisitions is by leasing two backhoes, and one D-9 dozer, renting one compressor and purchasing one air track.

As the completion date in this iteration is less than the completion date of the previous iteration, the penalty for

delay is reduced and the overhead has also been reduced. The total cost of the project, however, has increased to $656,605. This value is recorded for future comparisons and the counter, monitoring increases in cost will now register 1.

TIME RESOURCE USAGE TABLE

$i = 2$

FIG. 4-3

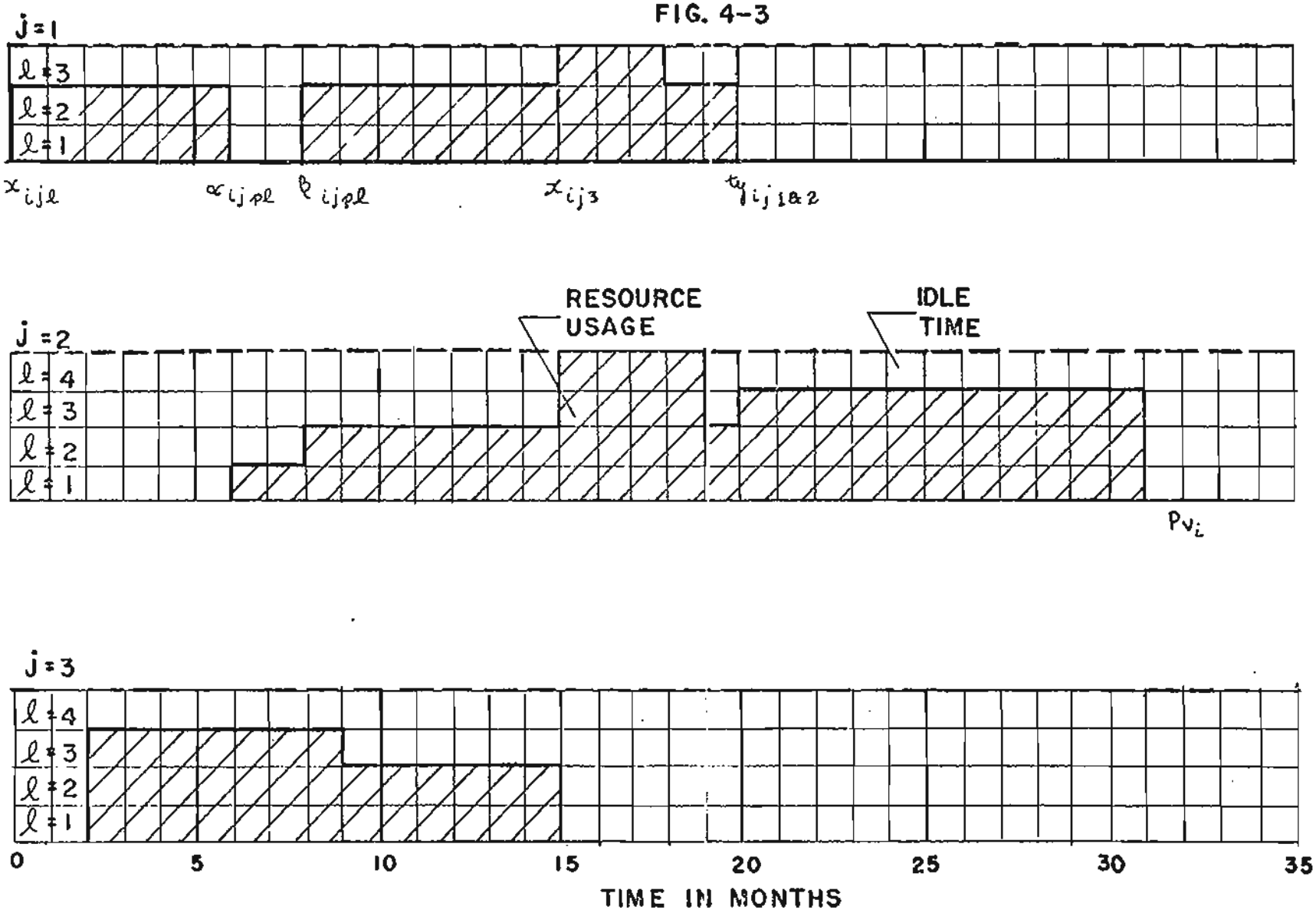

TIME RESOURCE USAGE TABLE

$i = 2$

FIG. 4-3 CONT'D

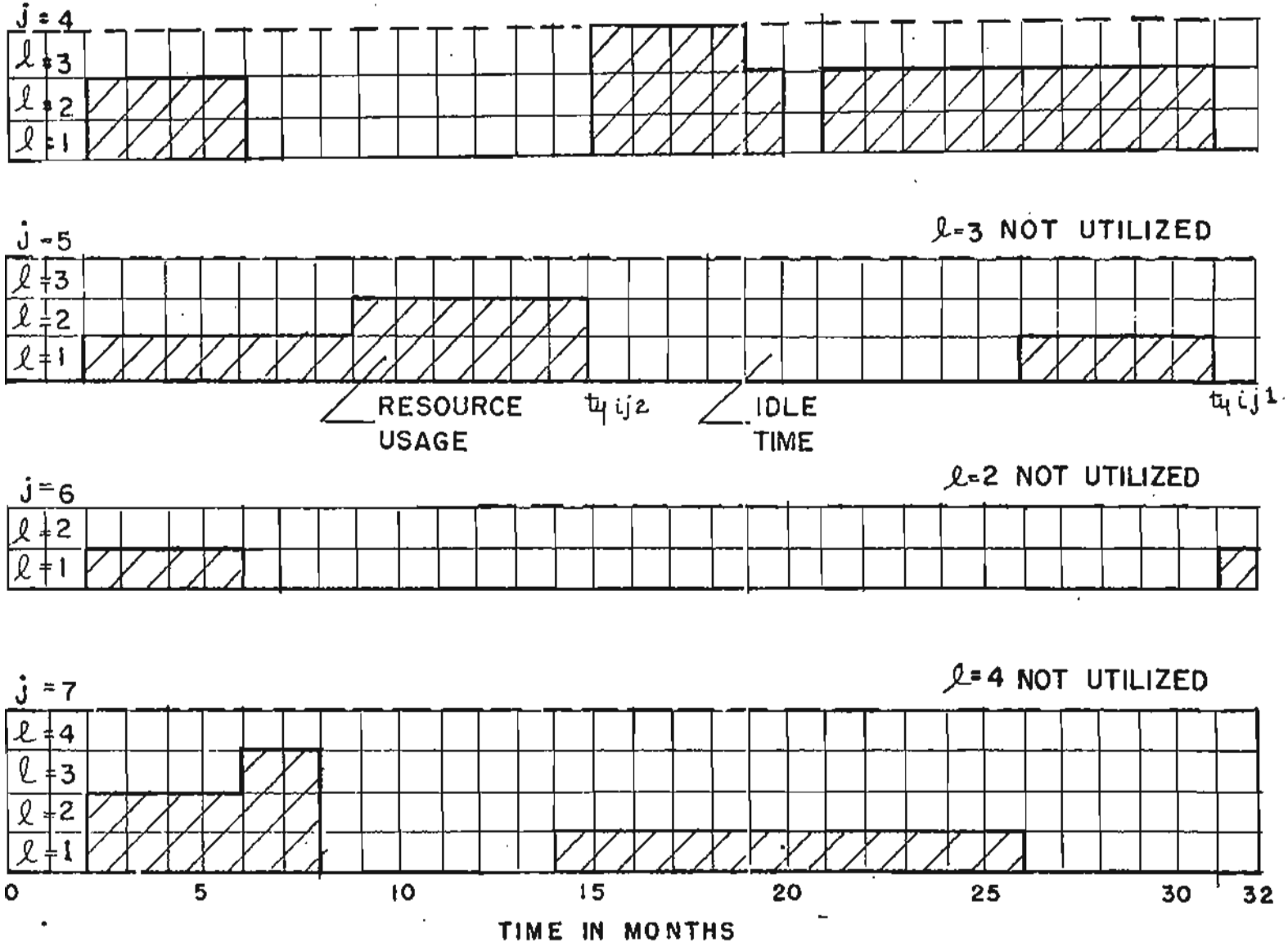

SUMMARY OF CALCULATIONS

$i = 2$

TABLE 4-7

RESOURCE TYPE	J=1	J=2	J=2	J=3	J=4	J=5	J=6	J=7
ℓ	-	3	4	3	3	-	-	3
$C_j < P_{vi}$	-	No	No	No	Yes	-	-	Yes
$A_j < E$	-	Yes	Yes	Yes	Yes	-	-	No
$PWPC_{j1}$	-	-	-	-	1,040	-	-	-
$PWMC_{j1}$	-	443	443	295	266	-	-	762
$PWHC_{j1}$	-	-	-	-	2,494	-	-	-
$PWGPC_{j1}$	-	-	-	-	-	-	-	-
$PWTPC_{ij\ell}$	-	-	-	-	3,800	-	-	-
$PWLC_{j1}$	-	44,611	11,552	12,736	4,989	-	-	14,403

SUMMARY OF CALCULATIONS (Cont'd)

$i = 2$

TABLE 4-7

RESOURCE TYPE	J=1	J=2	J=2	J=3	J=4	J=5	J=6	J=7
$PWTLC_{ijl}$	-	45,054	11,995	13,031	5,255	-	-	15,165
$PWRC_{jl}$	-	50,984	13,203	12,736	6,236	-	-	16,203
$PWTRC_{ijl}$	-	48,582	13,646	13,031	6,502	-	-	16,965
$PWMINC_{ijl}$	-	45,054	11,995	13,031	3,800	-	-	15,165
$METHOD_{ijl}$	-	2	2	3	1	-	-	2
$PWHPCN_i$	13,673	78,805	-	23,214	30,910	30,869	8,809	83,156
$EQUIPT_i$	13,673	137,532	149,527	185,772	220,482	251,351	260,160	358,481

SUMMARY OF COST

$i = 2$

TABLE 4-8

PROJECT DURATION (Pv_i)	32 months
IN-HOUSE OPERATING COSTS ($PWHPCN_i$)	$269,436
EQUIPMENT COSTS ($EQUIPT_i$)	$358,481
JOB OVERHEAD ($OVERHD_i$)	$ 40,356
BONUS-PENALTY ($PENBON_i$)	6,205
OTHER PROJECT COSTS (Y)	$251,563
TOTAL COMBINED COSTS ($TTLCST_i$)	$656,605

Explanation of i = 3 Level (third iteration)

All resources are now incremented by one where possible. At the i = 3 level and from Table 4-2, the following is obtainable.

RESOURCE DATA i = 3

TABLE 4-9

J	RESOURCE NAME	RM_{ij}	N_j	D_j	ACQUISITION REQUIRED
1	Truck	4	4	7	No
2	Backhoe	5	2	6	Yes (3)
3	Compressors	4	2	4	Yes (2)
4	Air Track	4	2	5	Yes (2)
5	10-T Crane	3	3	3	No
6	20-T Crane	2	1	2	Yes (1)
7	D-9 Dozer	5	2	5	Yes (3)

Resource allocation is now carried out using (RM_{3j}) level of resources, and the applicable time resource usage chart is obtained (Fig. 4-4). From this table the methods of acquisition are determined on the basis of minimum cost. The results of all costs are shown in Tables 4-10 and 4-11.

From these tables it can be noted that the first additional resource of the J-2 type (backhoe) is rented while the

second additional backhoe is leased. This type of resource cannot now be purchased as could be done in the first iteration because the new project duration of 31 months is less than 36 months, the economic life of the backhoe.

As before, additional resources that cannot be utilized will not be considered in the economies of the project. This applies to the fifth backhoe, the fourth compressor, the fourth air track, the third 10-T crane, the second 20-T crane and the fourth and fifty D-9 dozer. It is also noted that the level of compressors, 10 T crane and 20-T crane cannot be increased over the second iteration because of the physical limitations of D_j.

From Table 4-10, the total additional equipment cost has increased to $100,384, and the total cost of all equipment has increased to $368,545, the penalty is again decreased and from Table 4-11 the total project cost has increased to $664,945.

This is the second consecutive increase and the counter will now read 2.

TIME RESOURCE USAGE TABLE

$i = 3$

FIG. 4-4

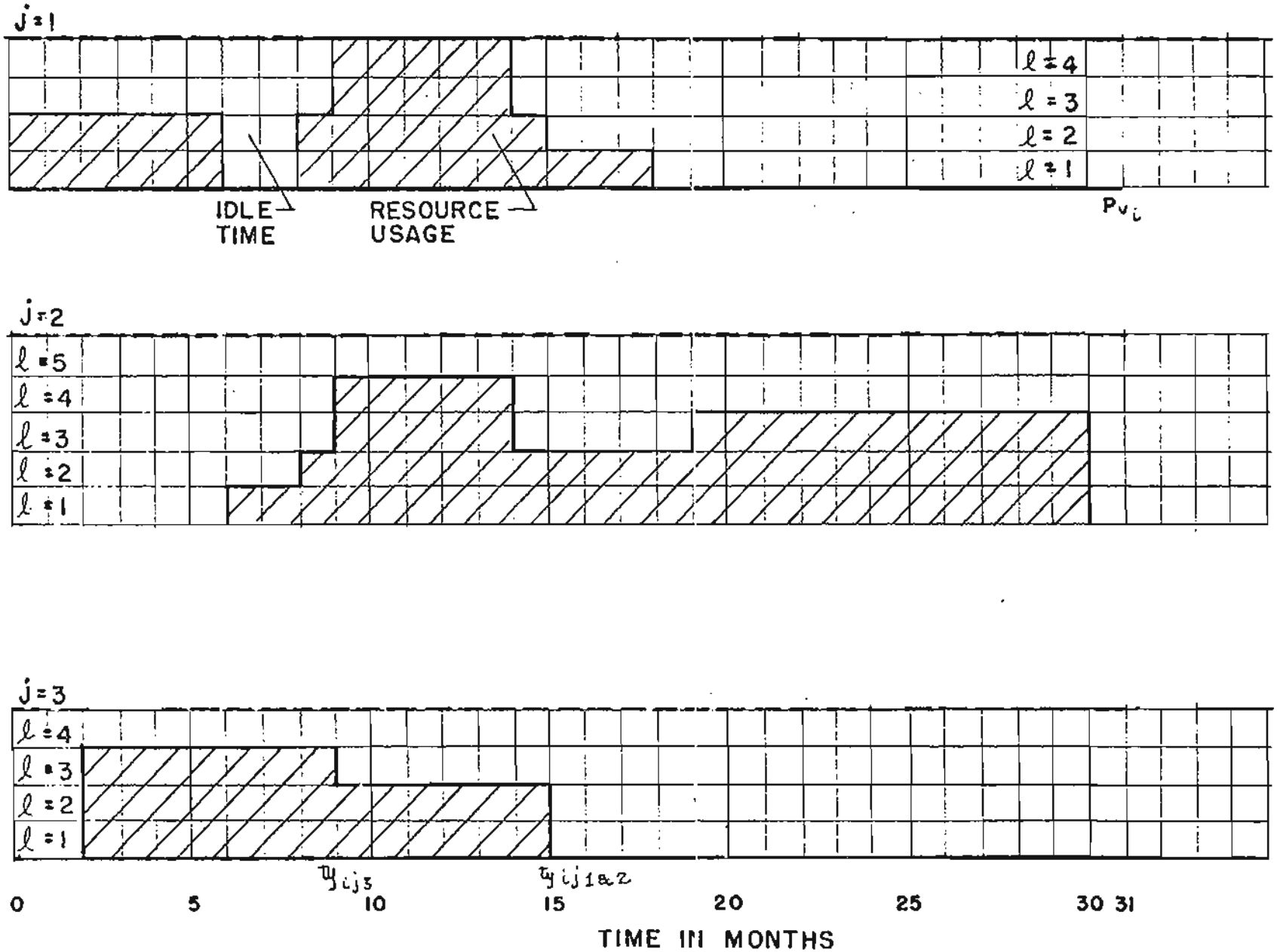

TIME RESOURCE USAGE TABLE

$i = 3$

FIG. 4-4 CONT'D

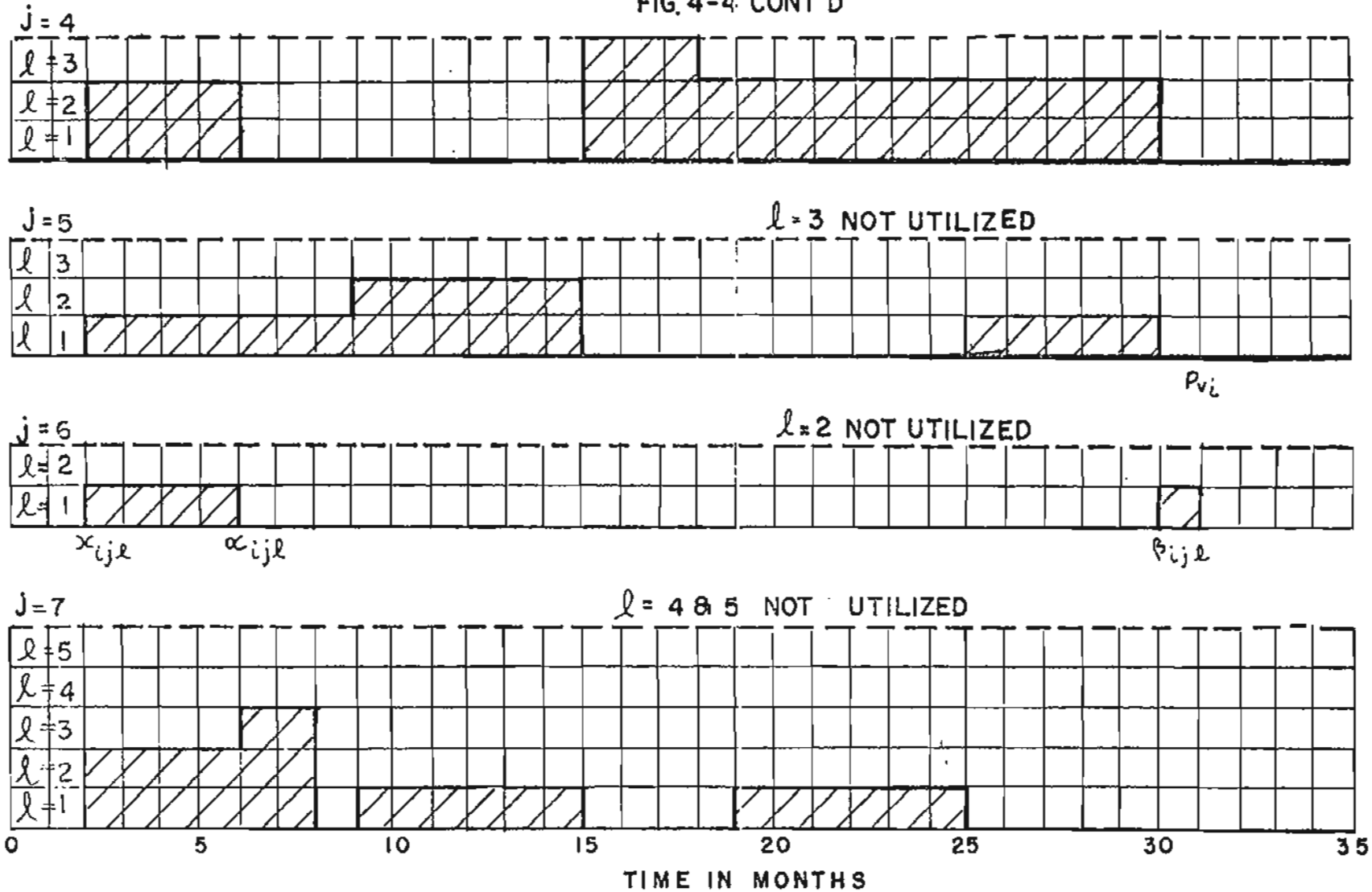

SUMMARY OF CALCULATIONS

$i = 3$

TABLE 4-10

RESOURCE TYPE	J=1	J=2	J=2	J=3	J=4	J=5	J=6	J=7
ℓ	-	3	4	3	3	-	-	3
$C_j < P_{v_i}$	-	No	No	No	Yes	-	-	Yes
$A_j < E$	-	Yes	Yes	Yes	Yes	-	-	No
$PWPC_{j1}$	-	-	-	-	1,040	-	-	-
$PWMC_{j1}$	-	465	465	295	266	-	-	762
$PWHC_{j1}$	-	-	-	-	2,494	-	-	-
$PWGPC_{j1}$	-	-	-	-	-	-	-	-
$PWTPC_{ij1}$	-	-	-	-	3,800	-	-	-
$PWLC_{j1}$	-	59,923	15,038	12,736	4,989	-	-	14,403
$PWTLC_{j1}$	-	60,388	15,503	13,031	5,255	-	-	15,165

SUMMARY OF CALCULATIONS (Cont'd)

i = 3

TABLE 4-10

RESOURCE TYPE	J=1	J=2	J=2	J=3	J=4	J=5	J=6	J=7
$PWRC_{jl}$	-	68,484	17,187	12,736	6,236	-	-	16,203
$PWRDC_{jl}$	-	16,064	-	-	-	-	-	-
$PWTRC_{ijl}$	-	52,885	17,652	13,031	6,502	-	-	16,965
$PWMINC_{ijl}$	-	52,885	15,503	13,031	3,800	-	-	15,165
$METHOD_{ijl}$	-	3	2	3	1	-	-	2
$PWHPCN_{i}$	13,766	75,836	-	23,214	31,316	30,910	8,821	84,298
$EQUIPT_{i}$	13,766	142,487	157,990	194,235	229,351	260,261	269,082	368,545

SUMMARY OF COST

$i = 3$

TABLE 4-11

PROJECT DURATION (Pv_i)	31 months
IN-HOUSE OPERATING COSTS ($PWHPCN_i$)	$268,161
EQUIPMENT COSTS ($EQUIPT_i$)	$368,545
JOB OVERHEAD ($OVERHD_i$)	$ 39,265
BONUS-PENALTY ($PENBON_i$)	$ 4,691
OTHER PROJECT COSTS (Y)	$252,444
TOTAL COMBINED COSTS ($TTLCST_i$)	$664,945

J = 2 Rental - Returned for period 14 - 18 months inclusive.

Explanation of i = 4 Level (fourth iteration)

Resources are again incremented by one where possible and resource allocation carried out on the RM_{4j} level. From the allocation a time usage resource table as presented in Fig. 4-5 is obtained. From this chart it is evident that even though additional resources can be made available, only in the case of the backhoe can the top level of resources be used. For the D-9 dozer, the top two levels cannot be used and for all other resource types, except j = 2, the upper level only cannot be used. (See Fig. 4-5).

RESOURCE DATA i = 4

TABLE 4-12

J	RESOURCE NAME	RM_{ij} i = 4	N_j	D_j	ACQUISITION
1	Truck	5	4	7	Yes (1)
2	Backhoe	6	2	6	Yes (4)
3	Compressor	4	2	4	Yes (2)
4	Air Track	5	2	5	Yes (3)
5	10-T Crane	3	3	3	No
6	20-T Crane	2	1	2	Yes (1)
7	D-9 Dozer	5	2	5	Yes (3)

The project completion date has been shortened to 26 months, which for the first time is less than the specified completion date, thus qualifying the project for a bonus.

The cost of acquiring each additional resource for every resource type is calculated and the summary of cost shown in Table 4-13. It is noted that for backhoes the first two additional resources should be rented while the next two additional backhoes should be leased. It is also noted that it is more economical to return the first two additional backhoes to the owner during idle periods. Total equipment cost ($EQUIPT_i$) has been increased to $393,163. There is a small bonus which decreases cost and overhead has been reduced because of the shortened construction time. The total cost of the project has increased to $681,000. It is interesting to note that even though additional resources can be applied because of this iteration, the actual in-house equipment allocated is less than in the previous iteration, and thereby causes a decrease in in-house operating costs. This is the third consecutive increase in total project cost and, therefore, no further iterations are necessary.

TIME RESOURCE USAGE TABLE

$i = 4$

FIG. 4—5

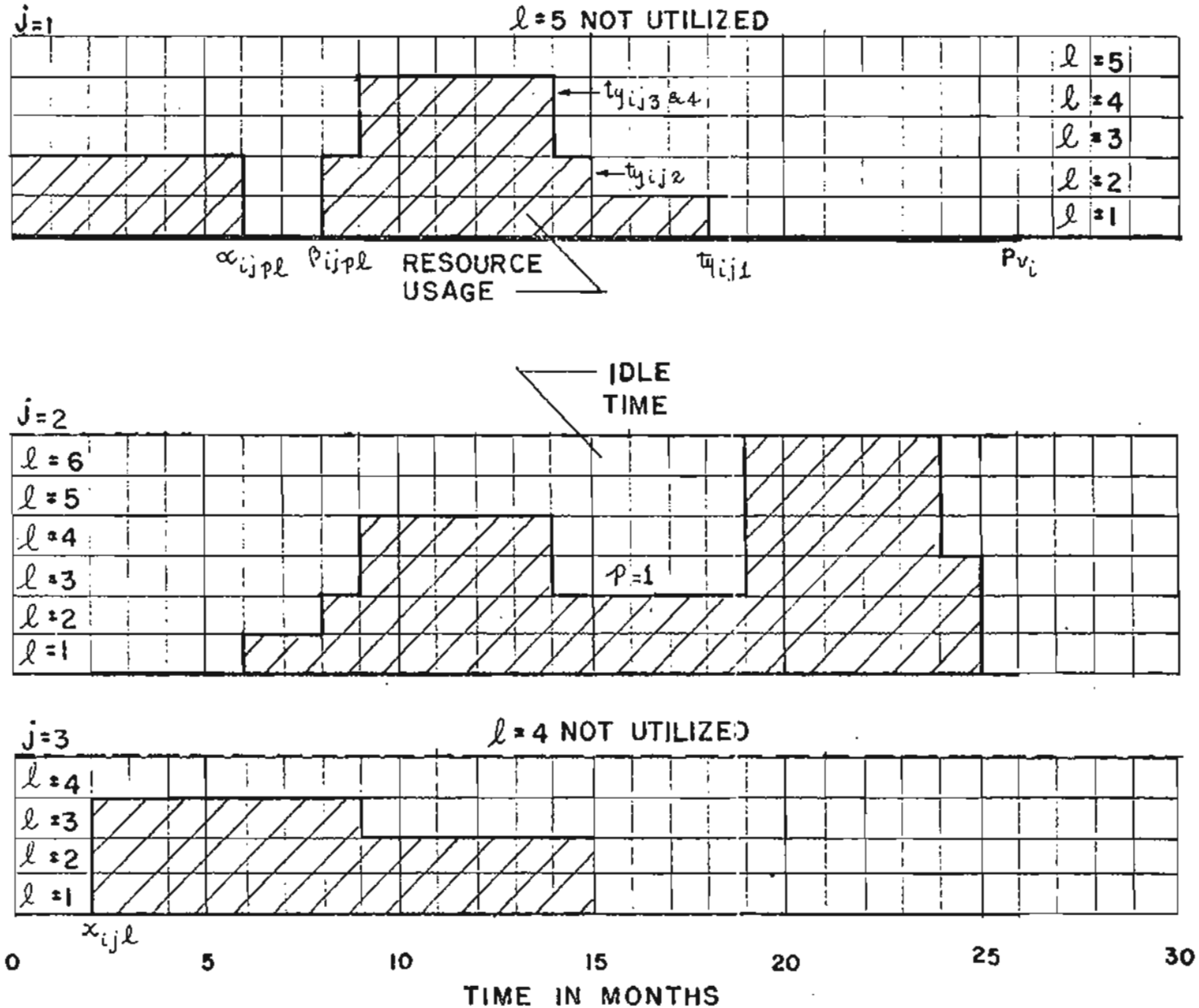

TIME RESOURCE USAGE TABLE $i=4$ FIG. 4-5 CONT'D

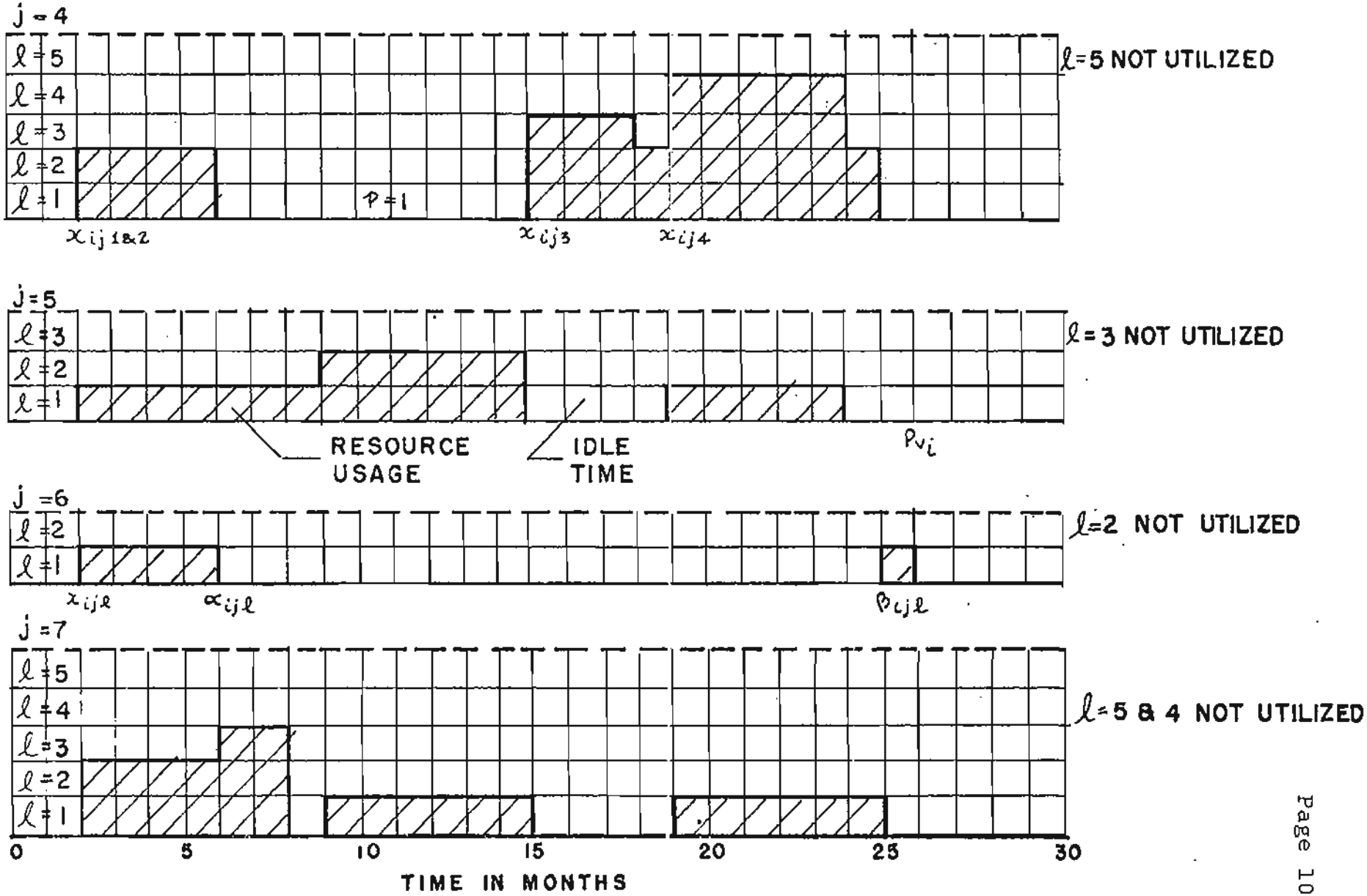

SUMMARY OF CALCULATIONS i=4 Table 4-13

RESOURCE TYPE	J=1	J=2	J=2	J=2	J=2	J=3	J=4	J=4	J=5	J=6	J=7
ℓ	-	3	4	5	6	3	3	4	5	6	7
$Cj < P_{v_i}$	-	No	No	No	No	No	Yes	Yes	-	-	Yes
$Aj < E$	-	Yes	Yes	Yes	Yes	Yes	Yes	Yes	-	-	No
$PWPC_{j\ell}$	-	-	-	-	-	-	3,062	1,657	-	-	-
$PWMC_{j\ell}$	-	465	465	430	430	295	266	258	-	-	762
$PWHC_{j\ell}$	-	-	-	-	-	-	6,465	3,971	-	-	-
$PWGPC_{j\ell}$	-	-	-	-	-	-	577	-	-	-	-
$PWTPC_{ij\ell}$	-	-	-	-	-	-	10,370	5,886	-	-	-
$PWLC_{j\ell}$	-	46,809	44,060	13,899	13,899	23,214	14,672	7,942	-	-	14,403
$PWTLC_{ij\ell}$	-	47,274	44,525	14,329	14,329	23,509	14,938	8,200	-	-	15,165
$PWRC_{j\ell}$	-	53,496	50,354	15,885	15,885	23,214	18,340	9,928	-	-	16,203
$PWRDC_{j\ell}$	-	16,064	16,064	-	-	8,314	1,803	-	-	-	-

SUMMARY OF CALCULATIONS i = 4 Table 4-13 (Cont'd)

RESOURCE TYPE	J=1	J=2	J=2	J=2	J=2	J=3	J=4	J=4	J=5	J=6	J=7
$PWTRC_{ij\ell}$	-	37,897	34,755	16,315	16,315	15,195	16,803	10,186	-	-	16,965
$PWMINC_{ij\ell}$	-	37,897	34,755	14,329	14,329	15,195	10,370	5,886	-	-	15,165
$METHOD_i$	-	3	3	2	2	3	1	1			2
$PWHPCN_i$	13,766	60,426	-	-	-	23,214	23,458	-	31,194	8,881	84,298
$EQUIPT_i$	13,766	112,089	146,844	161,173	175,502	213,911	247,739	253,625	284,819	293,700	393,163

SUMMARY OF COST i = 4 Table 4-14

PROJECT DURATION (Pv_i)	26 MONTHS
IN HOUSE OPERATING COSTS. ($PWHPCN_i$)	$245,237
EQUIPMENT COSTS ($EQUIPT_i$)	393,163
JOB OVERHEAD ($OVERHD_i$)	33,539
BONUS-PENALTY ($PENBON_i$)	—3,253
OTHER PROJECT COSTS (Y)	257,631
TOTAL COMBINED COSTS ($TTLCST_i$)	$681,080

There have been four iterations of resource allocations which produce four sets of cost. These costs are summarized below in Table 4-15.

TABLE 4-15

SUMMARY OF COSTS AND PROJECT DURATION

	i = 1	i = 2	i = 3	i = 4
Project Duration (P_{v_i})	39 months	32 months	31 months	26 months
In-house Operation Cost ($PWPNCN_i$)	$233,123	$269,436	$268,161	$245,237
Equipment Acquisition Costs	44,702	89,045	100,384	147,926
Job Overhead ($OVERHD_i$)	47,938	40,356	39,265	33,539
Bonus-Penalty ($PENBON_i$)	16,138	6,205	4,691	—3,253
Other Project Costs (Y)	245,321	251,563	252,444	257,631
Total Combined Costs ($TTLCST_i$)	587,422	656,605	664,945	681,080

All costs shown are actual costs involved, applied at the time monetary exchange is required and converted to present worth with time zero used as a base.

The data as shown in Table 4-15 is plotted in Fig. 4-6 for each iteration, and curves are developed and plotted in this figure. From Fig. 4-6 the optimum cost and project duration is at the i = 1 level, or $587,422 and 39 months respectively. From the curve of combined cost it is evident that as more resources are applied, project duration will decrease, however, cost will increase. Also evident is the fact that if less resources are applied to the project, costs decrease in spite of penalty clauses and increased overhead. However, resources cannot be decreased below the minimum level (V_j).

It is interesting to note that if the prestige factor was affirmative and the construction organization wished to complete the project on or before the specified completion date, the increase in cost in this example would be $681,080 - $587,422 or $93,658.

PROJECT COST Vs TIME ELEMENT (ACTUAL)

FIG. 4-6

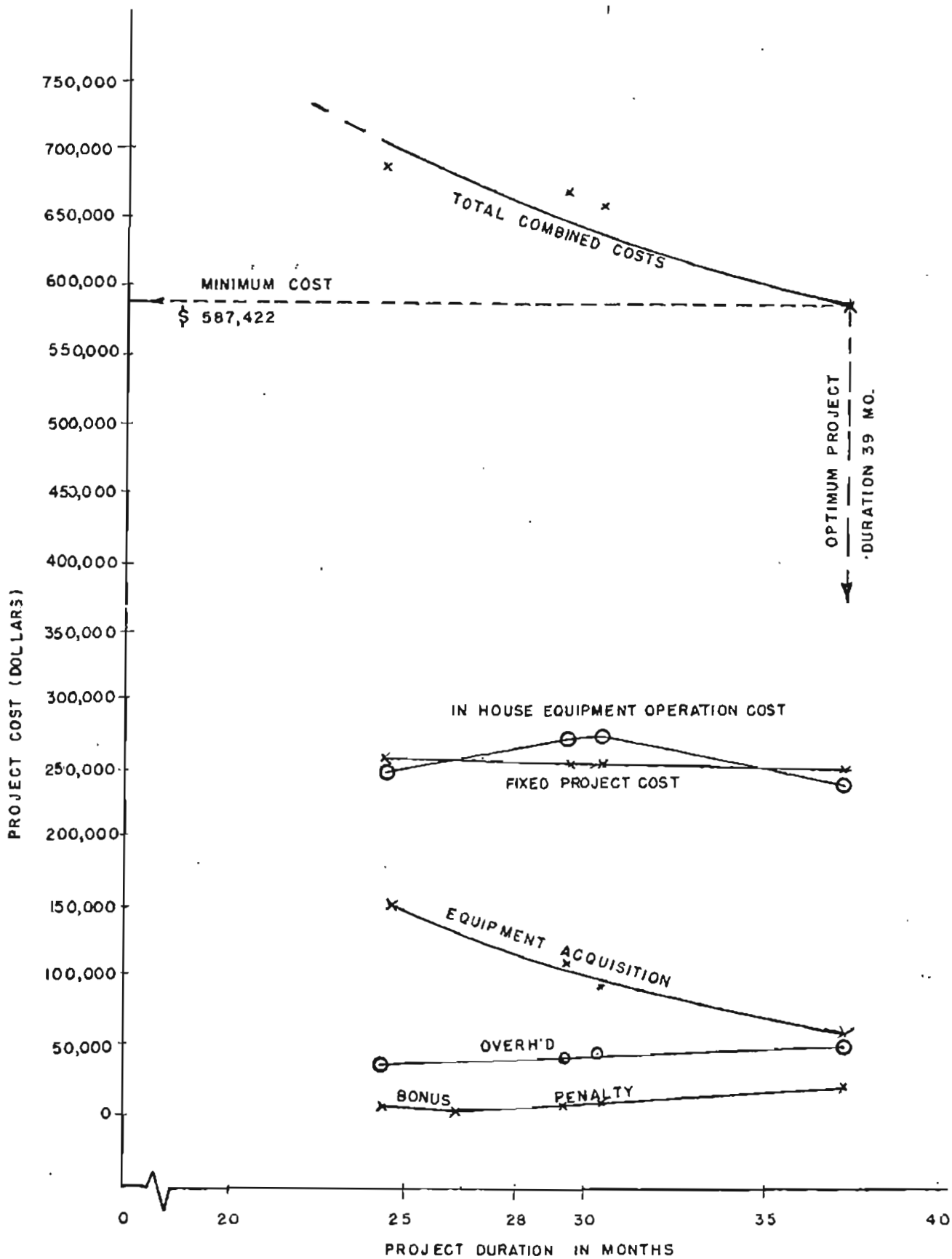

Summary

Chapter IV has provided a worked example for the model presented in Chapter III.

All aspects of the model have been implemented including the acquisition of resources above the minimum level required to complete the project. Acquisitions have been made by purchasing and leasing. Physical limitations and the constraints of the investment policy and economic life have been considered. Both the bonus and the penalty have been used. Some resources are utilized on subsequent projects where continuous use can be found. The specified completion date has been investigated and cost determined both for shorter and longer than specified completion times. The optimum level of resources, the optimum project duration and its related costs have been determined. As a result of this exercise, the following results have been obtained.

i) $P_{v_{opt}}$ - 39 months - optimum project duration

ii) Sur_{opt} - \$587,422 - minimum project costs

iii) Calendar schedule for $P_{v_{opt}}$ - this would be a standard schedule by calendar days using the $i \approx 1$ level.

Table 4-16 shows the optimum level of resources required. A reference to this table will show that one additional backhoe can be acquired by purchasing. The capital cost is less than

the applicable investment policy, the economic life is less than the project duration, and it is the least expensive of the three modes of acquisition investigated. (Acquisition costs are 1, Purchase $21,756 2, Lease $28,674 and 3, Rentals $32,712).

One compressor can be rented. The capital cost is less than the remaining investment policy and its economic life is less than the project duration. However, this level of compressor is only required for a short period of time and it is less expensive to rent, than to purchase or lease. (Acquisition costs are 1, Purchase $7,781 2, Lease $13,031 and 3, Rentals $13,031).

One D-9 Dozer can be leased. Although its economic life is less than the project duration, the capital cost is such that the investment policy would be exceeded. This eliminates acquisition by purchase. Leasing is less expensive than renting. (Acquisition costs are 1, Purchase N/A, 2, Lease $15,165 and 3, Rentals $16,965).

TABLE 4-16

iv) TABLE OF RESOURCE - OPTIMUM LEVEL, NUMBER & MODE OF ACQUISITION

j	Name j	Optimum Level	No. of Acquisition	Method of Acquisition
1	Truck	2	Nil	N/A
2	Backhoe	3	1	Purchase
3	Compressore	3	1	Purchase
4	Air Track	2	Nil	N/A
5	10-T Crane	2	Nil	N/A
6	20-T Crane	1	Nil	N/A
7	D-9 Dozer	3	1	Lease

TABLE OF IDLE TIMES

TABLE 4-17

v)

j	Name j	Completely Idle Time	Resource Level (ℓ)	Idle Resources (months) 1 From	1 To	2 From	2 To	3 From	3 To	4 From	4 To
1	Truck	2	1	6	8	20	24	27	39	-	
			2	6	8	20	39	-		-	
2	Backhoe	Nil	1	0	6	24	27	38	39	-	
			2	0	8	24	27	38	39	-	
			3	0	27	38	39	-		-	
3	Compressor	Nil	1	0	2	15	39	-		-	
			2	0	2	15	39	-		-	
			3	0	2	9	39	-		-	
4	Air Track	Nil	1	0	2	6	20	37	39	-	
			2	0	2	6	20	24	26	37	39
5	10-T Crane	1	1	0	2	15	33	38	39	-	
			2	0	9	15	39	-	-	-	

TABLE OF IDLE TIMES (Cont'd)

TABLE 4-17

v)

j	Name j	Completely Idle Time	Resource Level (ℓ)	Idle Resources (months) 1 From	1 To	2 From	2 To	3 From	3 To	4 From	4 To
6	10-T Crane	Nil	1	0	2	6	38	-	-	-	-
7	D-9 Dozer	Nil	1	0	2	8	14	20	27	33	39
			2	0	2	8	39				
			3	0	6	8	39				

Note

It is to be noted that 1) all calculations were carried out with the aide of an Olympia Electronic Calculator (Model 1CR-412), using four figure logarithms, 2) all figures past the decimal place were ignored when determining dollar values, and 3) economic factors(i.e. SPWF) were interpolated from standard tables.

CHAPTER V

CONCLUSIONS

This thesis has presented a methodology of uniting project planning, resource allocation and resource acquisition, to obtain optimum benefits to its user. Its use is intended for the construction organization which can systematically investigate all feasible levels of resources utilization for its maximum profit.

The methodology is intended for use on virtually any size project in the heavy construction industry, such as hydro-electric projects, highways projects and other earth moving projects where high cost of equipment is involved.

The methodology involves three levels of feasibility (physical, economic and financial) and is represented in the thesis by the number of resource required, the modes of acquisition and the investment policy, respectively.

The methodology can be monitored for varying inputs, such as changing capital cost of equipment, interest rates, and extension or deletions to the project in question. The methodology can be used on a multi-project basis dealing with each project sequentially. The output information concerning idle time on one project can be used as input for another project. This methodology can provide, if desired, the times of major capital commitments and could, therefore, be helpful in predicting cash flow.

When more than one project is being considered on a sequential basis, the idle times of the resources on the preceeding project are not considered. This is deliberate and justified when one considers the distance and related mobilization costs and time between scattered projects. Idle times may be used for miscellaneous works on or near the construction site in question.

As a result of this methodology, construction organizations can systematically plan to keep a control over their capital investments and thus leave themselves with sufficient working capital. Hopefully, to the extent that these companies remain solvent, business failures in the construction industry can be reduced.

The combination of the method of maximum resource usage and the method of minimum resource acquisition produces a minimum cost schedule which hopefully can increase the profits of a construction organization.

A computer programme can be developed based on the methodology of this thesis.

The limits of network size and the number of resource types used is dependent upon the limitation of the computer (s) available to the user.

Further research could deal with other variables of i) by investigating the Production/Down Time Ration which is a function of statistical records and life expectancy of a

resource, ii) the purchase of resources whose economic life exceeds the total of project duration, plus a time allowance for future projects, iii) the use of a varied slection of priorities for determining the method of acquisition.
iv) this methodology has assumed that if a resource is not available when first required, then that resource will not be available for the project at any time. Further research could investigate the possibility of delaying certain network activities because of the unavailability of a resource when required.

This thesis has introduced the problem area, defined the variables, developed a model, and has worked an example using the model.

This methodology has incremented each resource type by one where feasible. Further research could develop a methodology whereby incrementation by each resource type independently could be achieved and thereby investigate the cost of every possible combination of resources.

This methodology has assumed that once a resource is made available to the project it remains available throughout the project. Further research could investigate the possibilities of resource type being made available for a part of the project only. General use of the methodology may provide a reduction in the number of business failures in the construction industry, in a given period of time

and also may provide an increase in profits of those firms who consistently use this methodology.

-

Sequencing Projects

The methodology proposed can be used on sequential projects with the assumption that resources are available from the start to the completion of the project. In order to utilize the methodology and integrate it with new projects as they occur, and to use the output from the preceding project as input to the new project, so that the availability of a resource can be considered whenever the resource is idle and as such, available from the previous project, the flow charts will have to be supplemented.

The flow charts presented in Chapter III and in particular the resource usage table generated on Flow Chart Sheet 7, Page 51, will be replaced by the resource usage table shown in Fig. A-1 on Page 117. This resource usage table is plotted against time and is generated separately for each piece of equipment and indicates if it is to be required or not required. The resource use will be indicated in the table by the numeral 1. If a resource is not to be used the value is zero.

Having obtained a value of either 1 or 0 for k against time, an overlay consisting of available resources can be introduced. Information about availability will be received from an input of dates of availability for each in-house resource. The applicable dates revise the values of k from 0 or 1, to 0, 1, 2 or 3. The numeral 2 will indicate that the resource is available but not required and the numeral 3 will indicate that the resource is available and required. Values of 1 and 0 will remain as before. Values of 1 and 2 are filled in after resource allocation.

TIME RESOURCE USAGE AND AVAILABILITY TABLE

FIG. A—1

AVAILABILITY ℓ

NO. OF RESOURCES

$\ell = 5$	0	0	0	0	0	0	0	0	0	2	2	2	2	2	2	2	2	2	2	2	2	2
$\ell = 4$	0	0	0	0	0	0	0	1	1	3	3	2	2	2	2	2	2	2	2	2	2	2
$\ell = 3$	0	0	0	0	0	2	2	3	3	3	3	2	2	2	3	3	3	3	2	2	2	2
$\ell = 2$	0	0	0	0	1	3	3	3	3	3	3	3	3	3	3	3	3	3	2	2	2	2
$\ell = 1$	0	0	2	2	3	3	3	3	3	3	3	3	3	3	3	3	3	3	3	2	2	2

USAGE

x_{ij} P_{v_i}

TIME

Fig. A-1 This table, developed as explained on the previous page, will provide the basis for all information on resource usage and availability. From the resource allocation procedures, the times of all resource usages are obtained for each type and for each unit of resource. The output from this table would be used as input for future projects.

Appendix B

Sensitivity Analysis

A model for selection of a mode for resource acquisition which would minimize total project cost has already been presented. Three modes of equipment acquisition were introduced. It would be interesting to investigate the effect of modal change on the objective function. This can be done by assuming a single mode of acquisition for the entire project duration in the example in Chapter IV and comparing the result with the already obtained result of the alternative modes. Each mode is considered separately for the entire project; but purchase mode is considered without an associated investment policy (E).

TABLE B-1

ACQUISITION COSTS BY SINGLE MODE METHOD

i	Purchase	Lease	Rent	Optimum combination of modes of acquisition
$i=1(i_{opt})$	$167,787	$62,708	$56,870	44,702 (Table 4-4 Page 82)

From the above it can be seen that if all of the required equipment was purchased, the cost of acquisition would be $167,787, whereas using the Heuristic Method of Equipment Acquisitions for Maximum Profit, the cost of acquisition is $44,702. The dramatic variance is due mainly because the restriction of the investment policy has been lifted for this illustration.

Values of most of the variables used in the model can be easily estimated in real life. The accuracy of the optimization achieved is undoubtedly dependent upon the estimators faculties but a variation in the estimates would not drastically upset the results.

Possible changes in the expected duration of a future project do have some effect on the optimum results. Its effect on the mode of acquisition and the objective functions can be studied by varying the expectations of using resources on future projects, and, consequently, varying the time permitted for repaying the capital cost of a resource when purchase is the mode of acquisition. This is done by assuming the expected future project duration to be 0%, 25%, 50%, 75% and 100% of the optimum project duration calculated in the example in Chapter IV.

TABLE B-2

COSTS DUE TO SENSITIVITY OF L_j

Duration (months)	Cost of Equipt. Acquired by Purchase	Total Project Cost $TTLCST_i$	Remarks
Pv_i=39(36)	$29,537	$587,422	*Based on economic life of 3 yrs. One backhoe (J=2) and one compressor (J=3) purchased. Investment policy retained.
39+0%(39)	29,205	587,090	One backhoe and one compressor purchased.
39+25%(49)	28,399	586,284	" " "
39+50%(59)	27,866	585,751	" " "
39+75%(68)	27,590	585,475	" " "
39+100%(78)	27,247	585,132	" " "

* Values for % increases taken to the next highest whole month.

So that comparison of results is made on a realistic basis, the following priorities of equipment purchase are assumed to have been made by the owner.

1) Truck
2) Backhoe
3) Compressor
4) Air Track
5) 10-T Crane
6) 20-T Crane
7) D-9 Dozer

It is to be noted from Table B-2 that the difference in total project cost between 0 and 100% increase in the time permitted to repay acquisition by purchase is $2,290 ($587,422 - $585,132) which represents 0.39% of total combined costs. It can be considered that the model is not highly sensitive to variance in L_j.

The benefit of the model can be noted in the difference of costs from a single mode of purchase less the optimum combined acquisitions as follows.

Cost of acquisition by purchase ($167,787) less optimum ($44,702) = $123,085

Cost of acquisition by lease ($62,708) less optimum ($44,702) = $18,006

Cost of acquisition by rental ($56,870) less optimum ($44,702) = $12,168

It may also be observed that the model is useful for the projects where heavy use of equipment is made. Its usefulness is sensitive to the ratio of equipment to the total project cost. In the example presented in Chapter IV the project cost is increased without increasing the expenditure on equipment, the following

figures are obtained.

TABLE B-3

MODEL BENEFIT - EQUIPMENT VS TOTAL PROJECT COST

% increase in total project cost	Total project cost	Total equipment cost by acquisition	Ratio of equipment to total project cost	Percentage of total project cost - benefit expressed in percentage		
				Purchase	Lease	Rent
%	$587,422	$44,702	1/13.14	20.95%	3.06%	2.07%
25%	734,277	44,702	1/16.42	16.76	2.45	1.65
50%	881,133	44,702	1/19.71	13.96	2.04	1.38
75%	1,027,988	44,702	1/22.99	11.97	1.75	1.18
100$	1,174,844	44,702	1/26.28	10.47	1.53	1.03

It is obvious that the higher the equipment/total project cost ratio, the greater is the benefit that can accrue from the use of this model.

Bibliography

1. Ahuja, H.N., CPM/PERFORMANCE CONTROL SYSTEM. Thesis presented to University of Waterloo, July 1969.

2. Ahuja, H.N., RESOURCE ALLOCATION (REALL), Memorial University of Newfoundland, 1970.

3. Auexenbury, James S. and Preston, Lee E., CASES AND PROBLEMS IN ECONOMICS, Englewood Cliffs, N.J., Prentice-Hall Inc., 1960.

4. Associated General Contractors of America - COST CONTROL AND CPM IN CONSTRUCTION: A MANUAL OF GENERAL CONTRACTORS. Washington. The Associated General Contractors of America, 1964.

5. Beja, Auraham, PROBABILITY BOUNDS IN REPLACEMENT POLICIES FOR MARKOV SYSTEMS. Management Science, November 1969.

6. Davis, Edwards W., RESOURCE ALLOCATION IN PROJECT NETWORK MODELS - A SURVEY. The Journal of Industrial Engineering, April 1966.

7. Deatherage, George E., CONSTRUCTION SCHEDULING AND CONTROL. McGraw-Hill Inc., 1965.

8. Deatherage, George E., CONSTRUCTION OFFICE ADMINISTRATION. McGraw-Hill Inc., 1964.

9. DeGarmo, E. Paul., ENGINEERING ECONOMY - 4th Edit. The MacMillan Company, 1970.

10. Douglas, James, OBSOLESCENCE AS A FACTOR IN THE DEPRECIATION OF CONSTRUCTION EQUIPMENT. Dept. of Civil Engineering, Stanford University, Tech. Report No. 22, May 1963.

11. Douglas, James, CONSTRUCTION-EQUIPMENT POLICY: THE ECONOMIC LIFE OF EQUIPMENT. Dept. of Civil Engineering, Stanford University, Tech. Report No. 61, July 1966.

12. Due, John F. and Clever, Robert W., INTERMEDIATE ECONOMIC ANALYSIS, Homewood, Illinois, Richard D. Irwin Inc., 1966.

13. Gill, Paul G., SYSTEMS MANAGEMENT TECHNIQUES. McGraw-Hill Inc., 1968.

14. Heilbroner, Robert L., THE ECONOMIC PROBLEM (Second Edition) Englewood Cliffs N.J., Prentice-Hall Inc., 1970.

15. IBM, RESOURCE ALLOCATION PROCESSOR (RAP), PMS IV, IBM Program Number 5734-XP4.

16. IBM, RESOURCE ALLOCATION REAL/360 IBM Program Number 5736-XP2.

17. Johnson, J.R., A BRANCH AND BOUND ALGORITHM FOR THE RESOURCE CONSTRAINED PROJECT SCHEDULING PROBLEM. August 1967.

18. King, William R., & Wilson, Talmadge A., SUBJECTIVE TIME ESTIMATES IN CRITICAL PATH PLANNING - A PRELIMINARY ANALYSIS. Management Science, January 1967.

19. McCracken, Daniel D., A GUIDE TO FORTRAN IV PROGRAMMING. John Wiley & Sons, Inc., N.Y., Third Edit. 1968.

20. Martino, R.L., PROJECT MANAGEMENT & CONTROL - VOL. III - ALLOCATING AND SCHEDULING RESOURCES. American Management Association.

21. Mize, Joe Henry, A HEURISTIC SCHEDULING MODEL FOR MULTI-PROJECT ORGANIZATION. Thesis presented to Prudue University, 1964.

22. Miscellaneous, RESOURCE ANALYSIS AND SCHEDULING EXAMPLES.

23. Noejl, John N. and Brumbaugh, Philip, INFORMATION CONCEPTS IN NETWORK PLANNING. The Journal of Industrial Engineering, July 1967.

24. O'Brien, James J., CPM IN CONSTRUCTION MANAGEMENT. McGraw-Hill Book Co., N.Y. 1965.

25. Pascoe, Timothy Lawrence, AN EXPERIMENTAL COMPARISON OF HEURISTIC METHODS FOR ALLOCATING RESOURCES, University Engineering Department, Queen's College, Cambridge, 1965.

26. Priluck, Herbert M. & Hourihan, Peter M., PRACTICAL CPM FOR CONSTRUCTION. R.S. Means Co., Inc., Mass., 1968.

27. Smith, Neil Skene, ECONOMICS, COMMERCE AND ADMINISTRATION (Vol. 2), London, Pergramm Press Ltd., 1966.

28. STATISTICS CANADA, Catalogue 61-002, Second Quarter 1971.

29. Waldron, A. James, THE USE OF PERT IN SCHEDULING MANUFACTURING OPERATIONS.

30. Wiest, Jerome D., A HEURISTIC MODEL FOR SCHEDULING LARGE PROJECTS WITH LIMITED RESOURCES. Management Science, February 1967.