ISBN 0-315-73324-1

A MOLECULAR GENETIC ANALYSIS OF HYBRIDIZATION BETWEEN TWO SPECIES OF DEER (ODOCOILEUS) IN WESTERN CANADA

CENTRE FOR NEWFOUNDLAND STUDIES

TOTAL OF 10 PAGES ONLY
MAY BE XEROXED

(Without Author's Permission)

GLENYS ANNE HUGHES, B.Sc.

A MOLECULAR GENETIC ANALYSIS OF HYBRIDIZATION BETWEEN TWO SPECIES OF DEER (ODOCOILEUS) IN WESTERN CANADA

By

© Glenys Anne Hughes, B.Sc.

A thesis submitted to the School of Graduate Studies in partial fulfillment of the requirements for the degree of Master of Science

Department of Biology
Memorial University of Newfoundland

August 1990

St. John's Newfoundland Canada

National Library of Canada
Bibliothèque nationale du Canada

Canadian Theses Service
Service des thèses canadiennes

Ottawa, Canada
K1A 0N4

The author has granted an irrevocable non-exclusive licence allowing the National Library of Canada to reproduce, loan, distribute or sell copies of his/her thesis by any means and in any form or format, making this thesis available to interested persons.

L'auteur a accordé une licence irrévocable et non exclusive permettant à la Bibliothèque nationale du Canada de reproduire, prêter, distribuer ou vendre des copies de sa thèse de quelque manière et sous quelque forme que ce soit pour mettre des exemplaires de cette thèse à la disposition des personnes intéressées.

The author retains ownership of the copyright in his/her thesis. Neither the thesis nor substantial extracts from it may be printed or otherwise reproduced without his/her permission.

L'auteur conserve la propriété du droit d'auteur qui protège sa thèse. Ni la thèse ni des extraits substantiels de celle-ci ne doivent être imprimés ou autrement reproduits sans son autorisation.

ISBN 0-315-73324-1

Canada

ABSTRACT

Hybridization between two species of deer (Odocoileus) in western Canada has been postulated for many years. Mitochondrial and nuclear components of the genomes of deer from this and other regions in North America were analyzed to test whether these deer constitute reproductively isolated species or whether interspecies genetic exchange has occurred by hybridization.

The polymerase chain reaction (PCR) was used to amplify a 359 base pair fragment of the mitochondrial cytochrome b gene from 81 white-tailed deer (O. virginianus), mule deer (O. hemionus hemionus), and Sitka black-tailed deer (O. hemionus sitkensis). Direct DNA sequencing of a 302 base pair block of the PCR-amplified products revealed 34 variable nucleotide positions. These variants define 13 distinct mitochondrial DNA (mtDNA) sequence genotypes. Twelve of these are confined to one or the other species: five genotypes were found only in white-tailed deer and seven only in mule deer or black-tailed deer. In only one instance is a genotype shared between species: a single deer that had been identified as a mule deer possessed a white-tailed deer-type mtDNA.

Allelic variants at the albumin locus also distinguish the two species. Of 53 animals sampled from British Columbia, Alberta, and Saskatchewan, 25 white-tailed deer

and 27 mule deer were homozygous for slow and fast albumin alleles, respectively. Only one animal showed the heterozygote albumin pattern characteristic of hybrid deer. This individual is the same mule deer that possessed an mtDNA genotype found otherwise only in white-tailed deer.

These data suggest there is little genetic introgression between mule deer and white-tailed deer in western Canada. Similar findings have been reported for Odocoileus in Montana, but high levels of hybridization have been documented between the same species in west Texas. Habitat disturbance and mating behaviour are factors that may affect the frequency and direction of hybridization in different localities.

Phenetic and cladistic analyses of sequence differences among white-tailed deer, mule deer, and black-tailed deer reveal a discordance between mtDNA genotype and species affinity. Interspecies hybridization, random phylogenetic sorting of mtDNA lineages, and differential rate of mtDNA evolution are considered as hypotheses to explain the relationships among mtDNA genotypes of these species.

ACKNOWLEDGEMENTS

My sincere thanks go to my supervisor, Steve Carr, who introduced me to this study and who set my efforts in a productive direction. His boundless patience was always appreciated, and his academic assistance and financial support were welcomed. Steve was never too busy for advice or spur-of-the-moment tutorials, and I thank him for giving so generously of his time. I thank Bob McClymont and Matt Cronin for providing deer tissue samples: my research relied on their efforts and generosity.

Throughout my program I often looked to others for help with unfamiliar (and familiar) lab procedures. Sylvia Bartlett always managed to find extra time in her busy schedule to help me out. I appreciate her assistance with isoelectric focusing and various other lab techniques too numerous to mention. Colin McGowan was helpful in getting me started with polyacrylamide gel electrophoresis. David Innes instructed me in cellulose acetate gel electrophoresis, and also supplied materials for my analysis. Willie Davidson generously provided me with materials of all kinds (some of which he is probably unaware); helpful advice he also gave freely. I received excellent technical assistance from Dawn Marshall and Grace Wu; their help during the last few weeks was especially valuable. I thank Roy Ficken for his photographic services.

I am indebted to those who took many hours to read and re-read various drafts of my thesis. John Brattey, Willie Davidson, Luise Hermanutz, David Innes, Dawn Marshall, and of course Steve Carr all had helpful comments; their suggestions and constructive criticism were instrumental to this work. Dawn and Luise helped with last minute details that would have taken me days to do on my own.

The moral support I received over the past two years has been a great boon to my research; my thanks to all those who helped in this way. Matt Cronin's interest and enthusiasm in turn kept me interested and enthusiastic, and David and Luise gave many encouraging words and much valued friendship.

I dedicate this thesis to my parents, Stanley John and Lyndell Anne Hughes, who have always been my major source of encouragement and inspiration. Their limitless enthusiasm and support for my endeavors make it all worthwhile.

CONTENTS

	Page
ABSTRACT	ii
ACKNOWLEDGEMENTS	iv
TABLE OF CONTENTS	vi
LIST OF TABLES	viii
LIST OF FIGURES	ix
INTRODUCTION	1
Classification and distribution of *Odocoileus*	3
Distinguishing features of white-tailed deer and mule deer	5
Evidence for hybridization	6
Analysis of hybridization in western Canada	7
A molecular approach to studying hybridization	8
Serum albumin electrophoresis	10
Mitochondrial DNA	12
Polymerase chain reaction and DNA sequencing	16
MATERIALS AND METHODS	20
Tissue source and collection	20
Cellulose acetate gel electrophoresis	20
Mitochondrial DNA isolation	25
Cytochrome *b* amplification	26
Single-stranded DNA desalting	28
DNA sequencing	29
Sequencing gel electrophoresis	30
Autoradiography	32

Page

Data analysis..... 32

RESULTS..... 33

Albumin electrophoresis..... 33

Cytochrome b sequence variation..... 37

MtDNA genotype distribution and frequency..... 39

MtDNA genotype sequence divergence..... 51

Cladistic analysis of mtDNA genotypes..... 51

DISCUSSION..... 56

Frequency and direction of hybridization in western Canada..... 56

Factors affecting hybridization..... 60

Distribution of mtDNA genotypes among deer populations..... 62

Discordance between mtDNA genotype and species affinity..... 64

Patterns of cytochrome b sequence evolution in *Odocoileus*..... 71

CONCLUSIONS..... 73

LITERATURE CITED..... 75

LIST OF TABLES

Table Page

1 Number of free-ranging deer sampled from each locality..... 21

2 Albumin genotypes of captive interspecies hybrids..... 36

3 Albumin genotypes of free-ranging deer from western Canada..... 38

4 Distribution of nucleotide substitutions in *Odocoileus*..... 42

5 Mitochondrial DNA genotypes found in deer from western Canada..... 46

6 Correspondence of cytochrome *b* genotype with mtDNA haplotype..... 47

7 Distribution of mitochondrial DNA genotypes among *Odocoileus* populations..... 48

8 Sequence divergences among 13 *Odocoileus* genotypes..... 52

9 Four phylogenetically informative nucleotide positions among *Odocoileus* genotypes..... 53

LIST OF FIGURES

Figure		Page
1	Distribution of white-tailed deer (*Odocoileus virginianus*) and mule deer and black-tailed deer (*O. hemionus*) in North America	4
2	The polymerase chain reaction	18
3	Geographic origin of free-ranging deer	23
4	A representative cellulose acetate gel	35
5	Variation in *Odocoileus* DNA sequences within a 302 base pair region of the mitochondrial cytochrome *b* gene	40
6	A representative DNA sequencing gel	44
7	Geographic distribution of nine *Odocoileus* genotypes	50
8	Two compatibility patterns of mtDNA genotypes	55

INTRODUCTION

A major goal of evolutionary biologists has been to characterize the genetic relatedness among groups of organisms in order to reconstruct their evolutionary past and to explain existing patterns of diversity. Efforts to achieve this goal have included comparative studies in morphology, paleontology, ecology, and animal behaviour. Measurement and comparison of phenotypic characters have been the traditional basis for species identification and systems of classification. However, many phenotypic traits vary as a result of environmental rather than genetic factors, and therefore they may be poor indices of the true taxonomic or evolutionary relationships among the organisms that express them. A more reliable system for determining the degree of genetic variation and extent of genetic divergence among lineages is examination of the genetic material itself.

Molecular genetic techniques, first introduced by Nuttall in 1902 (cited in Sarich 1968), have gained wide use in studies of evolutionary biology and phylogenetic reconstruction because they facilitate quantitative estimates of actual genetic differences among organisms. Research on genetic differences within and between animal lineages has demonstrated that molecular analyses may be used to study hybridization between different populations or

species. Differences in proteins and DNA are evident among populations or species that hybridize in the wild, and may be useful for understanding both the nature and origin of species, and the dynamics and implications of gene exchange (Hunt and Selander 1973; Ferris et al. 1983). Hybridization has been studied in crickets (Harrison et al. 1987), frogs (Lamb and Avise 1986), toads (Szymura and Barton 1986), lizards (Hall and Selander 1973), fish (Avise et al. 1984), birds (Yang and Selander 1968), mice (Hunt and Selander 1973; Ferris et al. 1983), and many other animals (reviewed in Hewitt 1988). There are, however, few instances of hybridization between closely related species of large mammals (Moore 1977; Barton and Hewitt 1985). Examples of ungulates known to hybridize in the wild are the European red deer and Japanese sika deer (Bartos and Zirovnicky 1982; Lowe and Gardiner 1975), plains and wood bison (Peden and Kraay 1979), and white-tailed deer and mule deer (Cowan 1962; Wishart 1980). Natural hybridization between these species offers a rare opportunity to examine the evolution of species differences and the dynamics of gene flow in well-studied, highly mobile, and economically important animals.

This research is a molecular genetic analysis of the relationships between white-tailed deer and mule deer from a region of sympatry in western Canada where there have been sporadic accounts of putative hybrids. The hypothesis tested

is that these species are reproductively isolated in this region. Hybridization and genetic introgression, random phylogenetic sorting of mitochondrial DNA and/or differential rate of mitochondrial DNA evolution are the alternate hypotheses evaluated to account for the evolutionary relationships observed among maternal lineages of these deer.

Classification and distribution of Odocoileus

White-tailed deer and mule deer belong to the order Artiodactyla, which is one of the more successful groups of large mammals. The family Cervidae, which includes deer, moose, elk, and caribou, originated in the Miocene or early Pliocene (20-30 million years ago) in Eurasia, and by the end of the Pliocene had diversified into numerous types, including those that migrated to and populated North America (Romer 1966; Kurten and Anderson 1980).

All North American deer belong to the genus Odocoileus (subfamily Odocoileinae), of which O. virginianus (white-tailed deer) and O. hemionus (mule deer and black-tailed deer) are the only extant species. White-tailed deer are distributed throughout North America, inhabiting all states except Alaska and Utah, and extending from the Maritimes to British Columbia and from the American Southwest to northern Alberta (Baker 1984) (Figure 1). Thirty subspecies of O. virginianus are currently recognized in North and Central

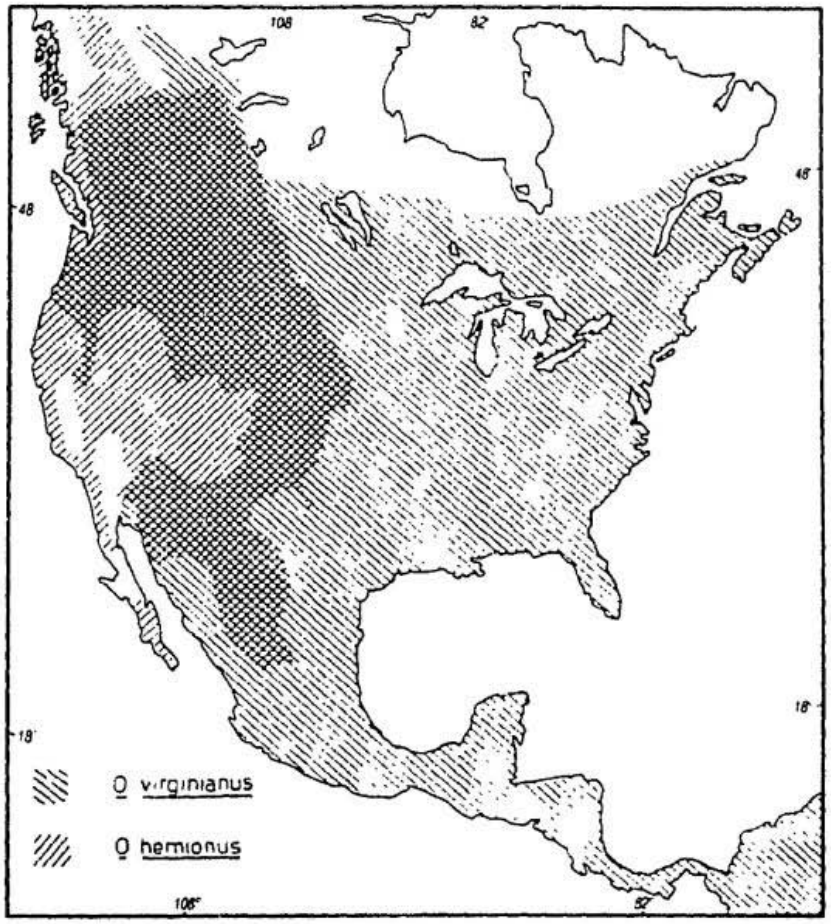

Figure 1. Distribution of white-tailed deer (Odocoileus virginianus) and mule deer and black-tailed deer (O. hemionus) in North America. The region where these species occur in sympatry is shown by the crosshatching overlap.

America (Baker 1984). The white-tailed deer of western Canada comprise two subspecies: O. v. ochrourus occupies the mountainous regions of Alberta and British Columbia, whereas O. v. dakotensis ranges eastward from the Rocky Mountain foothills.

Odocoileus hemionus is more western in its distribution than is O. virginianus, however the two species are sympatric for much of their range west of the Rocky Mountains (Figure 1). Seven subspecies of O. hemionus are currently recognized, of which O. h. hemionus, the Rocky Mountain mule deer, is the best studied and most widely distributed. It ranges from Manitoba and Minnesota to the West Coast, and from New Mexico to the northern borders of Alberta and British Columbia (Wallmo 1981). Columbian and Sitka black-tailed deer (O. h. columbianus and O. h. sitkensis, respectively) are subspecies that are morphologically distinct from mule deer, and are limited in their distribution to the west coast of North America from California to Alaska.

Distinguishing features of white-tailed deer and mule deer

White-tailed deer and mule deer are distinguishable by a number of morphological features such as tail, ear, and rump patch appearance, antler shape, and pelage. The size of the metatarsal glands also differs between species (Nichol 1938; Wishart 1980; Oceanak 1977). White-tailed deer

generally have smaller metatarsal glands than do sympatric mule deer: no overlap in the range of metatarsal gland size between sympatric populations of the species was noted in studies by Carr et al. (1986) and Oceanak (1977).

The two species differ also in behaviour (Marchinton and Hirth 1984; Geist 1987), diet (Krausman 1978; Martinka 1968), and habitat preferences (Kramer 1973; Smith 1987). Mule deer and white-tailed deer are known to co-exist in the same regions, however Kramer (1973) suggested that optimal habitat for white-tailed deer is free of mule deer, and vice versa.

Evidence for hybridization

Even where they have been observed together during the breeding season, O. virginianus and O. hemionus generally mate only with deer of the same species (Cowan 1962; Kramer 1973). Nevertheless, there have been rare accounts of free-ranging deer that have some traits intermediate in form between the two species and have other traits more closely resembling one of the parental types (Wishart 1980; Gavin 1984). Such observations, in the form of photographs, skins, hunter kills, road kills, or wildlife officer reports, have led researchers to suspect hybridization between these two species.

Hybrids have been obtained successfully in captivity from reciprocal crosses between mule deer and various

subspecies of white-tailed deer (Nichol 1938; Wishart et al. 1988). White-tailed deer have also been reported to hybridize in captivity with Columbian black-tailed deer (Cowan 1956, 1962; Gray 1971; Nichols and Murray 1973). F_1 hybrids resulting from such crosses have varied from stillborn fawns to seemingly completely fertile animals, and at least some hybrids backcrossed with the parental type are capable of producing viable offspring (Nichol 1938; Cowan 1962; Wishart et al. 1988; R. McClymont, pers. comm.).

Analysis of hybridization in western Canada

Putative hybrids between white-tailed deer and mule deer from western Canada have been documented: Cowan (1962) described an apparent wild hybrid from Beaverdell, British Columbia, and has seen none since then (I. McT. Cowan, pers. comm.); Kramer (1973) gave account of six hybrids from Alberta; and Wishart (1980) described four wild hybrids from Alberta: two were from Jasper National Park, one from near Czar, and another from near Coleman. Deer collected from Alberta that displayed phenotypic characters intermediate between those of the two species had serum albumin banding patterns suggestive of first generation hybrids or subsequent backcross generations (Wishart 1980; McClymont et al. 1982). The present study is a more extensive genetic analysis of wild deer from this region.

A molecular approach to studying hybridization

Captive-bred F_1 hybrids between white-tailed deer and mule deer typically display metatarsal glands intermediate in size between those of the two parental species. However, other morphological features such as tail, ears, rump patch, pelage, and antlers can vary in appearance from one hybrid animal to another (Nichol 1938; Wishart 1980), which makes visual identification of wild hybrids uncertain. Also, it may be difficult to determine the direction of a cross by simple observation of hybrid morphology. A more dependable approach to hybrid identification, and one that is useful for studying the ecological and evolutionary implications of interspecies hybridization, is genetic analysis. Genetic studies of deer from Texas (Carr et al. 1986; Stubblefield et al. 1986; Ballinger et al. submitted), Montana (Cronin 1986, and 1991; Cronin et al. 1988), Wyoming (Oceanak 1977), Oregon and Washington (Gavin and May 1988), and Alberta (McClymont et al. 1982) have examined hybridization in these areas. Analyses of both DNA and proteins have been useful not only for studying the evolutionary relationships among deer populations, but also for detailing the evolutionary patterns of the molecules themselves.

Considerable changes in the DNA and proteins of an organism can occur with negligible or no observable effect on phenotype. The ability to detect evolution at the molecular level, therefore, has become of major importance

in comparisons at and below the species level (Wilson et al. 1985). Even subtle changes in nucleotide sequence and amino acid composition may serve to distinguish recently derived lineages for which morphological measurements and fossil records are either uninformative or unavailable. Mutational differences among some closely related groups of organisms seem to accumulate at a stochastically-constant rate (a phenomenon termed the "molecular evolutionary clock" by Zuckerkandl and Pauling in 1965), which may explain why molecular data generally show more regular patterns of evolutionary change than do morphological characters (Nei 1987). Molecular clocks are calibrated by measuring the genetic difference between lineages whose times of divergence from a common ancestor are known from the fossil record. The clock can then be used to estimate the time of divergence of other lineages whose genetic differences have been calculated from protein or DNA data.

By comparing the extent to which proteins and DNA have changed through time, it is possible to evaluate the genetic constitution of animal populations. Deer have been the subject of numerous genetic studies involving population structure (Ramsey et al. 1979; Smith et al. 1984), gene flow (Ballinger et al. submitted; Carr et al. 1986), and genetic variability (Cowan and Johnston 1962; Baccus et al. 1983; Cothran et al. 1983; Smith et al. 1986; Kennedy et al. 1987). In studies like these, molecular techniques have

opened new lines of inquiry into the nature of genetic variation, and have placed previously unattainable genetic information within reach. It is now apparent that molecular analyses, in combination with morphological and ecological information, are essential for a more thorough understanding of systematics, population biology, and evolution.

Serum albumin electrophoresis

Protein electrophoresis is used extensively for studying problems in population biology, such as population subdivision (e.g. Ramsey et al. 1979) and nuclear gene flow between populations and species (e.g. Hunt and Selander 1973). Electrophoresis permits identification of different proteins by their different rates of migration in an electric field. Electromorphs, protein products of a single locus that differ in size and/or charge, are likewise identifiable and may serve to identify genetic differences between populations or species.

Electromorphs that exhibit essentially fixed allelic differences between groups of hybridizing animals have served in studies as markers of hybridization. For example, Avise et al. (1984) used two loci as markers of hybridization between subspecies of bluegill sunfish, and Gerhardt et al. (1980) assayed several loci to confirm the identity of two frog species and their hybrids.

Serum albumin is an abundant blood protein encoded in the nuclear genome. The amino acid sequence of this protein evolves approximately twice as fast as that of most other proteins (Wilson et al. 1974); consequently, it is useful for comparing groups of closely related animals. Albumin electrophoresis has been used previously to test for hybridization or genetic introgression between white-tailed deer and mule deer (Oceanak 1977; Wishart 1980; McClymont et al. 1982; Ballinger et al. submitted; Stubblefield et al. 1986; Cronin 1986; Cronin et al. 1988; Gavin and May 1988). Allopatric populations of white-tailed deer and mule deer or black-tailed deer are essentially fixed for alternate alleles at the albumin locus: white-tailed deer are homozygous for the "slow" allele, mule deer are homozygous for the "fast" allele, and first generation hybrids, which receive one allele from each parent, are heterozygous (McClymont et al. 1982). [To date, the only documented exception to this pattern has been found in two white-tailed deer from Michigan that were noted as being "variable" for albumin (Smith et al. 1984)]. Albumin, therefore, can serve as a marker of hybridization: detection of albumin heterozygotes may indicate either recent interspecies hybridization or introgression. Actual introgression of nuclear genes may be identified by the presence in one species of the allele(s) common to the other species subsequent to the first filial (F_1) generation, and is proof

that F_1 hybrids are fertile and can reproduce successfully in the wild.

The research presented here involves electrophoresis of serum albumin from white-tailed deer and mule deer to test for the presence of hybrids in the regions sampled. Detection of albumin heterozygotes would be an indication of nuclear gene flow between species, whereas absence of albumin heterozygotes would suggest that white-tailed deer and mule deer in this region are fixed for alternate albumin alleles, and thus have not hybridized extensively in the recent past.

Although examination of a nuclear gene marker, such as albumin, is suitable for testing for recent hybridization between species, it gives little or no information regarding the direction of hybridization, nor can it detect gene flow that occurred in the distant past. To overcome these limitations, this research included an analysis of mitochondrial DNA.

Mitochondrial DNA

Mitochondrial DNA (mtDNA) has been used extensively in evolutionary studies to determine the genetic affinities between and within animal species (Wilson *et al*. 1985). This small, double-stranded, circular molecule is located within mitochondria in the cellular cytoplasm, and is easy to isolate from small amounts of tissue. The high rate of

evolution, high copy number, and uniparental inheritance of mtDNA account for its popularity in comparisons among recently diverged populations and species. Because mtDNA is maternally inherited, it is useful for identifying lineages with common maternal ancestry, and for determining the direction of gene flow between hybridizing populations (Wilson et al. 1985; Avise 1986). Comparisons of the sequence of the entire molecule for Homo (Anderson et al. 1981), Mus (Bibb et al. 1981), Bos (Anderson et al. 1982), Xenopus (Roe et al. 1985), Rattus (Gadaleta et al. 1989), and Gallus (Desjardins and Morais 1990) have revealed that mtDNA of higher vertebrates lacks many of the complicating characters of nuclear DNA: typically, there are few or no intervening sequences, and the gene order is highly conserved. Indications that gene order is not a fixed feature of all animal mtDNA have been found in Drosophila (Goddard and Wolstenholme 1980), sea urchin (Jacobs et al. 1988), and chicken (Desjardins and Morais 1990). Evolution of mtDNA is primarily by base substitutions and short length mutations (Wilson et al. 1985). Large-scale mtDNA size variation has been reported for tree frogs and bowfin fish (Bermingham et al. 1986), lizards (Brown and Wright 1979), crickets, (Rand and Harrison 1989), and populations of some species of Drosophila (Fauron and Wolstenholme 1980). Bermingham et al. (1986) and Carr et al. (1987) note, however, that mtDNA size macrovariation has been observed

less frequently in mammals and birds than in other vertebrates and invertebrates. Size differences that have been found in mtDNAs are usually confined to the non-transcribed D-loop (Upholt and Dawid 1977; Hauswirth et al. 1984; Bermingham et al. 1986), which is known to evolve at an especially rapid pace. Cann and Wilson (1983) reported short deletions and additions in human mtDNA D-loop and other non-coding regions, as well as at junctions between coding regions.

Mitochondrial DNA is typically homogeneous within individuals (Lansmann et al. 1981; Wilson et al. 1985) and is inherited maternally through the egg cytoplasm without recombination (Upholt and Dawid 1977; Avise et al. 1979). Exceptions to this observed pattern have been reported, however. MtDNA sequence differences have been found between maternally related dairy cows (Hauswirth and Laipis 1982), among individual tree frogs and bowfin fish (Bermingham et al. 1986), and in the bovid mitochondrial D-loop region (Hauswirth et al. 1984). Paternal mtDNA contribution or mutation within a cell line may account for such intra-individual differences. However, the results of long-term mating experiments give no evidence for paternal leakage of mtDNA, and suggest that heteroplasmy is a rare and transient state due to the maternal inheritance and rapid sorting of mtDNA molecules in germ cell lineages (Birky et al. 1983; Lansmann et al. 1983; Ashley et al. 1989).

Despite these reports of heteroplasmy, mtDNA has been found to be a suitable genetic marker to identify maternal parentage and to follow different maternal lineages from one generation to the next (Harrison 1989). Assuming that mtDNA sequences diverge at a constant rate, comparisons of sequences from extant animals can be used to calculate the time since two individuals or species last shared a common female ancestor. The mtDNA of primates was estimated to evolve at an initial rate of 0.5-1.0% per lineage per million years, 5-10 times faster than typical single copy nuclear DNA (Brown et al. 1979). Similar results from studies on other species have extended this figure to a variety of tetrapod species (Wilson et al. 1985). This pace of evolution is attributable to mutations at "evolutionarily labile" sites, after which further changes in mtDNA accumulate more slowly (Avise et al. 1987). Thus, mtDNA studies are most useful for comparisons of species and conspecific populations that have separated within the last few million years (Brown et al. 1979).

Several recent studies on the mtDNA of deer have contributed to the growing body of data on deer genetics. Restriction enzyme analysis of deer mtDNA (Carr et al. 1986; Cronin et al. 1988) estimates Odocoileus mtDNA to be approximately 16.6 kilobases (kb) in length, which is very similar to the 16.5 kb-long bovine mtDNA molecule (Anderson et al. 1982). Neither intra-individual sequence

heterogeneity nor length polymorphism among genotypes was detected for Odocoileus from the southwestern U.S. (Carr et al. 1986).

Polymerase chain reaction and DNA sequencing

Information contained within the nucleotide sequences of homologous gene segments is useful to evolutionary biologists interested in the characterization of genetic differences among organisms. DNA sequence data facilitate an evaluation of the patterns of molecular evolution in a wide variety of plants and animals. Since the 1970s, intra- and inter-species DNA sequence variation has been examined both by restriction endonuclease assays and direct sequencing (Wilson et al. 1985). Restriction endonucleases are enzymes that cleave DNA only at specific short (4-9 base pair) sequences, and thus allow indirect assessment of DNA sequence variation when restriction patterns are compared across different taxonomic groups. However, restriction map preparation and alignment are prone to errors (cf. Kocher et al. 1989), may give a biased view of DNA sequence evolution, and present special problems of analysis (cf. Templeton 1983). The alternate approach, direct DNA sequencing (Sanger et al. 1977), allows more detailed examination of DNA sequence variation. Conventional cloning techniques used to obtain the large quantities of specific DNA fragments necessary for sequencing are also laborious and subject to

errors. These limitations have recently been overcome by an *in vitro* cloning procedure, the polymerase chain reaction (PCR).

PCR is a fast alternative to conventional cloning for isolating and amplifying specific fragments of target DNA from unpurified samples for genetic analyses (Saiki *et al.* 1988). PCR involves the enzymatic amplification of complementary DNA strands from an initial template and results in the exponential accumulation of a target gene fragment (Figure 2). Amplification proceeds by repeated cycles of heat denaturation of the complementary DNA strands, annealing at a lowered temperature of two oligonucleotide primers complementary to regions that flank the segment to be amplified, and an intermediate temperature extension of the annealed primers with a thermostable DNA polymerase. Ideally, the number of gene copies subsequently doubles with each cycle: twenty such cycles theoretically result in a million-fold amplification of the target gene fragment, which can then be sequenced directly. PCR is a fully automated procedure and is thus well suited to population studies in which DNA sequences of homologous regions of a few hundred base pairs are compared among many individuals (Kocher and White 1989; Kocher *et al.* 1989).

This study involves PCR amplification and sequencing of a fragment of the mitochondrial cytochrome *b* gene. The cytochrome *b* gene contains phylogenetic information of high

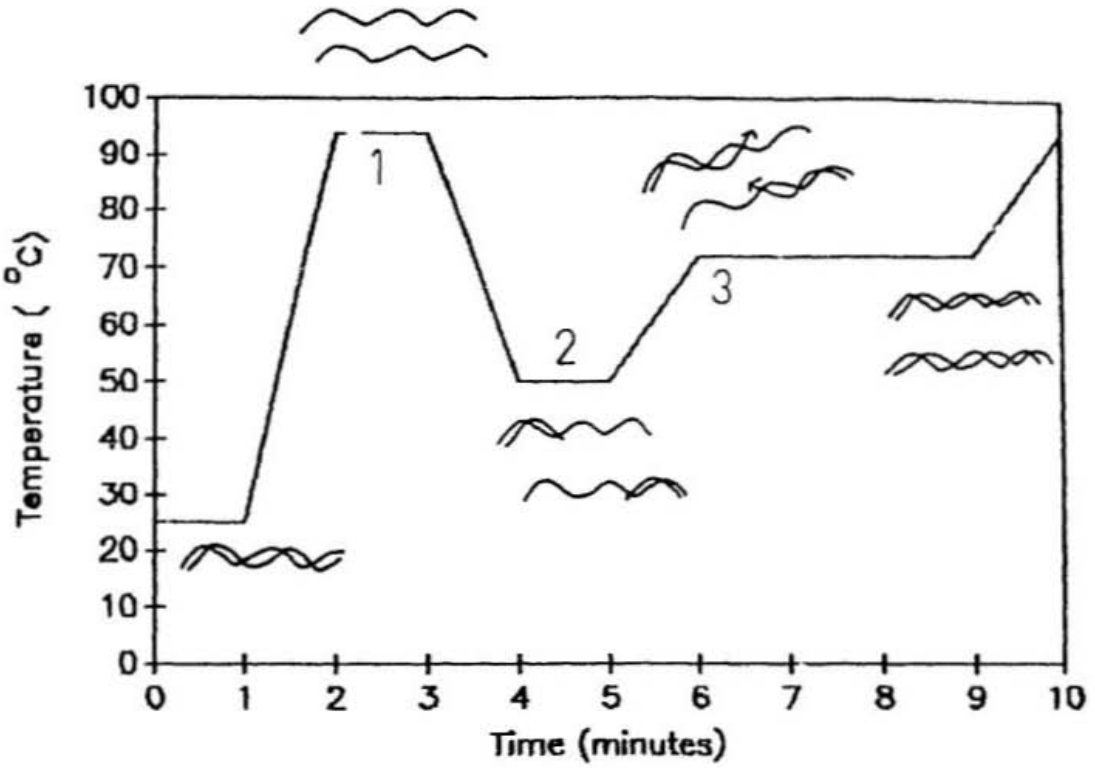

Figure 2. The polymerase chain reaction. One thermal cycle involves 1) denaturation, 2) primer annealing, and 3) extension steps, resulting in a doubling of the number of target DNA fragments. See text for details.

resolving power and wide taxonomic range, and has been used in recent studies of inter- and intra-species DNA sequence variation in various vertebrates and invertebrates (Kocher et al. 1989), jackals (Wayne et al. 1990), cod (Carr and Marshall, 1991), tuna (Bartlett and Davidson, 1991), and deer (Carr and Hughes, work in progress).

The work presented here tests for hybridization between species of Odocoileus. Electrophoresis of serum albumin and amplification and sequencing of homologous regions of the cytochrome b gene were used to identify and compare the genomes of white-tailed deer and mule deer. Species-specific nuclear and mitochondrial genotypes would suggest that no gene flow has occurred between species, inferring that the species are reproductively isolated in this region. Alternatively, the presence of shared genotypes would suggest that hybridization and possibly genetic introgression have occurred, in which case determining the direction of hybridization may be informative about the behaviour and ecology of these species. This research examines the phylogenetic relationships among populations of Odocoileus from western Canada, and discusses the evolutionary history of these Odocoileus mtDNA lineages.

MATERIALS AND METHODS

Tissue source and collection

Liver or heart tissues from 25 white-tailed deer, 30 mule deer, and 26 captive interspecies hybrids were supplied by R. McClymont, Alberta Fish and Wildlife, Edmonton, Alberta. Purified genomic DNA from six of each of white-tailed deer and mule deer from Montana, Sitka black-tailed deer from Alaska, and white-tailed deer from Connecticut were provided by M. Cronin, U.S. Fish and Wildlife Service, Anchorage, Alaska. DNA from two white-tailed deer from Minnesota were supplied by S. Carr, Memorial University of Newfoundland, St. John's, Newfoundland. Tissue and DNA samples were placed in 15 mL plastic tubes or in plastic bags, shipped on dry or wet ice, and stored at -80°C until immediately before use. Table 1 gives the number of deer sampled from each area. Collection localities of free-ranging deer from western Canada were identified by city or town, or by Wildlife Management Unit (WMU) (Figure 3). Samples from western Canada were predominantly from Alberta. Henceforth, reference to 'Alberta deer' also includes those individuals sampled from British Columbia and Saskatchewan.

Cellulose acetate gel electrophoresis

Frozen liver or heart samples were prepared for serum protein electrophoresis by thawing approximately 1-1.5 g of

Table 1. Number of free-ranging deer sampled from each locality in western Canada and the United States. Letters indicate sampling localities as shown in Figure 3. WT, white-tailed deer; MD, mule deer; BT, black-tailed deer; WMU, Alberta Wildlife Management Unit.

Origin	Locality	Sample Size		
		WT	MD	BT
Alberta				
Athabasca	A	1	-	-
Banff National Park	B	2	4	-
Beaverhill Lake	C	1	-	-
Calgary	D	-	4	-
Canmore	E	2	-	-
Cypress Hills	F	-	1	-
Edmonton	G	5	3	-
Mannville	H	1	-	-
St. Paul	I	1	-	-
Swan Hills	J	-	2	-
Wainwright	K	3	-	-
WMU 106	L	-	1	-
WMU 119	M	1	-	-
WMU 152	N	-	1	-
WMU 166	O	-	1	-
WMU 200	P	-	2	-
WMU 224	Q	1	-	-

Table 1 continued

Origin	Locality	Sample Size		
		WT	MD	BT
WMU 254	R	1	-	-
WMU 256	S	1	-	-
WMU 318	T	-	1	-
WMU 324	U	-	2	-
WMU 509	V	1	-	-
WMU 521	W	2	-	-
British Columbia				
Kootenay National Park	Y	2	1	-
Saskatchewan				
Cypress Hills	Z	-	7	-
United States				
Alaska	-	-	-	6
Connecticut	-	6	-	-
Minnesota	-	2	-	-
Montana	-	6	6	-
---		--	--	--
Total		39	36	6

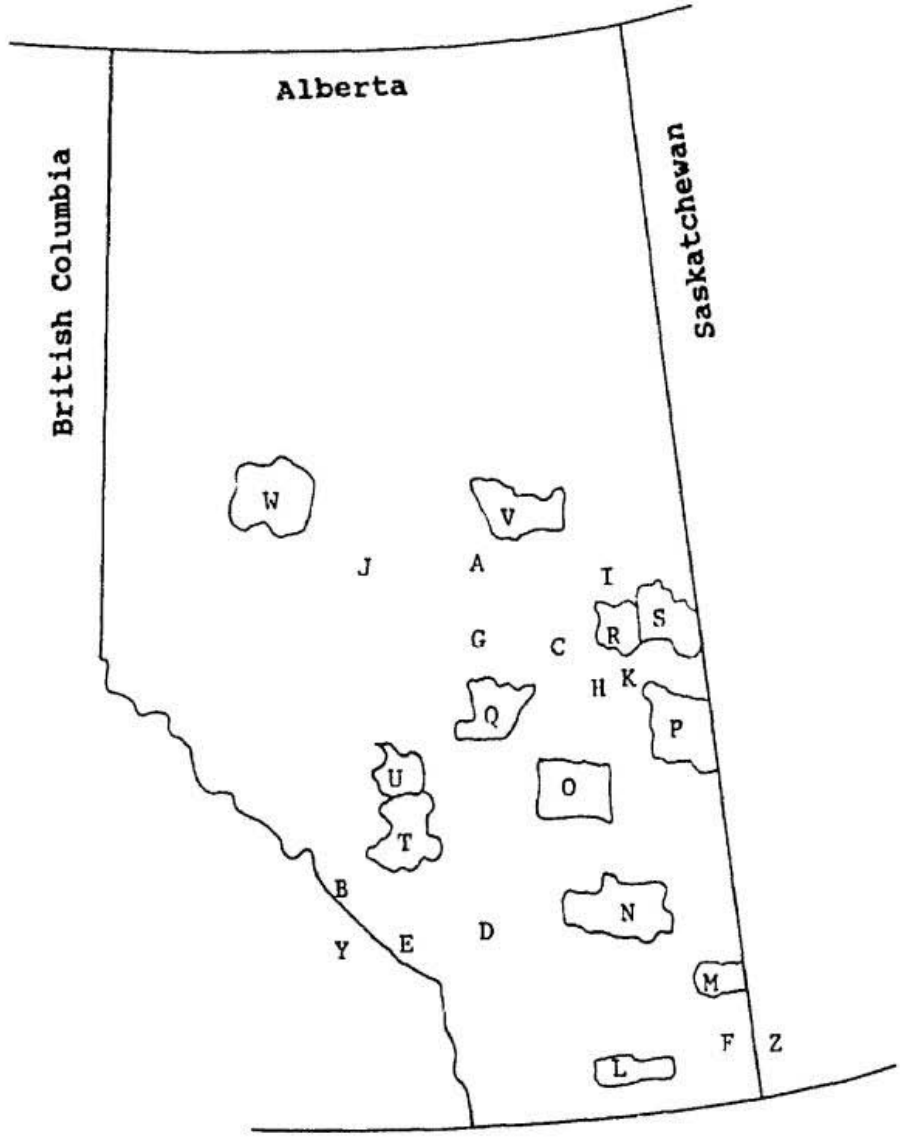

Figure 3. Geographic origin of free-ranging deer from western Canada. Letters indicate collection localities as given in Table 1.

tissue in snap-cap tubes on ice and centrifuging samples at 18,500 x g for 10 min at 5°C. Supernatant was dripped into a new tube, and was re-centrifuged as above to remove red blood cells. Supernatant was poured into a new tube, diluted approximately 1:10 (depending on sample concentration) in distilled, autoclaved water, and kept on ice until immediately before use.

Electrophoresis was performed using 76x76 mm Titan III Zip Zone Cellulose Acetate Plates (Helena Laboratories). Plates were soaked in Tris-Glycine buffer (30 g Tris, 144 g Glycine, brought to 1 L total volume with distilled water, pH 8.5, and diluted 1:9 for use) for 20 min and blotted dry before use. Samples were applied 3-4 times to plates, depending on sample concentration, using a Super Z Applicator (Helena Laboratories). Samples were subjected to electrophoresis at 2 mA per gel for 10-20 min in Tris-Glycine buffer in a horizontal electrophoresis chamber. Plates were stained in a general protein stain (0.4 g Coomassie Blue G250 in 50 mL 70% perchloric acid, brought to 1 L total volume with water) for approximately 4-6 minutes, destained in a solution of 60 mL acetic acid, 240 mL methanol, and 500 mL distilled water for 5 min, and rinsed gently under running distilled water. Samples were scored for albumin, which is the most abundant anodally-migrating serum protein (W. Davidson, pers. comm.).

Samples from 26 captive hybrids with known parentage

were run as controls for electrophoresis. Samples were run "blind" in lanes beside heterozygous individuals (i.e. known F_1 hybrids) and scored as either homozygous fast (FF), homozygous slow (SS), or heterozygous (FS). Because banding patterns were not always easily resolvable, samples were run repeatedly, at higher or lower concentrations, until they could be scored with greater confidence.

Mitochondrial DNA isolation

Samples were prepared for PCR amplification by extraction of mitochondrial DNA using a modification of steps 1-9 in Carr and Griffith (1987). Frozen deer livers or hearts were thawed on ice, and a small piece (about 0.1 g) of tissue removed and ground with a disposable plastic homogenizer (Pellet Pestle Motor from Kontes) in a 1.5 mL snap-cap tube containing approximately 500 uL ice-cold grinding buffer (0.25 M sucrose, 10 mM Tris, pH 7.4, 1 mM Na_2EDTA). Nuclei and debris were removed by centrifugation at 800 g for 5 min in a Tomy MTX 150 tabletop centrifuge cooled to 5°C. The supernatant was recovered into a clean tube, and the above step was repeated once or twice until a small pellet was produced.

Mitochondria were isolated by centrifuging at 18,500 g for 30 min at 5°C. The supernatant was removed, and the mitochondrial pellet was blotted dry. The pellet was vortexed in 240 uL ice-cold grinding buffer to resuspend the

mitochondria. Mitochondria were lysed by addition of 60 uL 10% SDS and incubation of samples at room temperature for 15-30 min. High molecular weight nuclear DNA was removed by adding 150 uL 3 M NaCl, vortexing, and precipitating on ice for from one to several hours. The lysate was then cleared by centrifugation at 17,500 g for 10 min at 5°C, and the supernatant was retained as the crude mtDNA extract.

Cytochrome b amplification

MtDNA was amplified directly from the cleared lysates. The amplification and sequencing oligonucleotide primers were obtained from the DNA Synthesis Facility, University of California, Berkeley, and correspond to the highly conserved cytochrome b sequences identified by Kocher et al. (1989):

5'-ccatccaacatctcagcatgatgaaa-3' (heavy-strand primer)
5'-gcccctcagaatgatatttgtcctca-3' (light-strand primer)

These primers amplify a 359 base pair segment of the mitochondrial cytochrome b gene for a variety of vertebrate species (Kocher et al. 1989).

Double-stranded PCR amplifications were carried out in 25 uL reactions containing 67 mM Tris-HCl (pH 8.8 at 25°C), 2 mM $MgCl_2$, 200 uM each dATP, dCTP, dGTP, and dTTP (Pharmacia or Boehringer-Mannheim), 10 pmol each of the heavy- and light-strand primers, and 1 unit of Amplitaq

polymerase (Perkin-Elmer Cetus). To this mixture was added 1 uL of the crude mtDNA preparation. [In most instances, a drop of mineral oil was added to the tube to prevent evaporation of the sample during amplification, but this step was not found to be critical]. The DNA was amplified in a Perkin-Elmer Cetus Thermal Cycler on the following step-cycle: strand denaturation at 92°C for 45 sec, primer annealing at 50°C for 45 sec, and primer extension at 72°C for 90 sec, repeated for 30 cycles.

Several modifications of this step-cycle were used: 94°C / 60 sec, 45°C / 60 sec, 72°C / 180 sec, 40 cycles; 94°C / 60 sec, 50°C / 60 sec, 72°C / 180 sec, 40 cycles; 92°C / 45 sec, 45°C / 45 sec, 72°C / 90 sec, 30 cycles. These variations generally resulted in poorer quality amplification as judged from smeared or faint bands when viewed under UV light and inferior sequencing products, and were not used consistently for these reasons.

A 10 uL portion of the amplification product was added to 5 uL of 5x tracking dye (25% glycerol (1.26 g/mL stock), 50 mM Na_2EDTA, 0.5% SDS, 0.1% bromophenol blue), subjected to electrophoresis for 1 h at 100 v in a 3% NuSieve gel in TAE buffer (40 mM Tris, 20 mM Na Acetate, 1 mM Na_2EDTA, pH 7.4). Ethidium bromide was added to the gel at a final concentration of 1 ug/mL. DNA fragments were visualized with 302 nm UV illumination.

A small portion of each 359 base pair cytochrome b

double-stranded product was removed from the gel with a pipette tip, added to 100 uL sterile, distilled water, melted at 65°C for 10 min, and vortexed. [If bands appeared unusually bright when viewed with UV light, the amount of distilled water added to the double-stranded portion was increased to 200 or 400 uL. This dilution gave equally good results for single-stranded amplification]. Single-stranded amplification was carried out on 2 uL of the melted material under the same conditions as for double-stranded amplification, except that one primer (typically the light-strand primer) was diluted 1:100 and the total reaction volume was increased to 100 uL (final primer concentration 4nM). The resulting single-stranded product was subjected to electrophoresis for 1 h at 100 v in a 2% NuSieve gel (FMC) in TA buffer (10 mM Tris, 33 mM Na Acetate, pH 7.4).

Single-stranded DNA desalting

Single-stranded products were desalted using either Centricon-30 microconcentrators (Amicon) or Ultrafree-MC membrane filters (Millipore). When Centricon-30 filters were used, the single-stranded amplification product (100 uL) was added to 2 mL sterile distilled water in the ultrafiltration unit and centrifuged at 3000 g (TMA-3 rotor of Tomy MTX 150 table-top centrifuge) for 20 min at room temperature. The filtrate was discarded, and the above step repeated twice. The retentate, which contained the single-stranded DNA, was

recovered by inverting the column into the collection cup and centrifuging as before for 5 min.

When Millipore filters were used, the single-stranded amplification product was added to 250 uL sterile distilled water in the insert cup, and centrifuged at 2000 g for 10 min. The filtrate was discarded from the lower centrifuge tube, 350 uL water were added to the insert cup, and the sample centrifuged again as above. The desalted, single-stranded DNA was resuspended in 40 uL water and collected after three of the above cycles. Desalted samples were stored in microfuge tubes at -20°C.

DNA sequencing

Single-stranded DNA sequencing reactions were prepared using reagents from Sequenase kits (Version 2.0: U.S. Biochemical). For each reaction, 7.0 uL desalted, single-stranded DNA amplification product were added to 2.0 uL 5X Sequenase buffer, and 10 pmol light strand primer (cyt b 1) to a total volume of 10 uL. To anneal the primer to the DNA template, reactions were heated to 65°C, held at 65°C for 10 min, and cooled to 30°C over 30 min in the DNA thermal cycler.

The DNA synthesis reaction was initiated by adding to each annealed reaction 5.5 uL of a mixture containing: 1.75 uL of a 1:50 dilution of the label mix (7.5 uM each of dGTP, dCTP, and dTTP); 1.0 uL 0.1 M dithiothreitol; 2.0 uL

Sequenase enzyme dilution buffer (10 mM Tris, pH 7.5, 5 mM dithiothreitol, 0.5 mg/mL bovine serum albumin); 0.5 uL α-^{35}S-dATP (approximately 1000-1350 Ci/mmol) (New England Nuclear); 0.25 uL Sequenase enzyme (13.0 units/uL modified T7 DNA polymerase). Reactions were pipetted to mix and then incubated at room temperature for 5 min.

The synthesis step was terminated by addition of 3.5 uL of the labelling reaction to each of four wells of a microtitre plate (Nunc) containing 2.5 uL of one of the four dideoxynucleoside triphosphates (ddATP, ddCTP, ddGTP, and ddTTP at 80 uM each). Each sample was mixed by pipetting, and was incubated at 37°C for 5 min. [Sequences of equally good quality were obtained if microtitre plates were heated to 37°C before the labelling reaction was added. However, this step was usually omitted].

Chain termination reactions were stopped by adding 4.0 uL of stop solution to each well, and pipetting to mix. Sequenase stop solution contains 95% formamide, 20 mM EDTA, 0.05% bromophenol blue, and 0.05% xylene cyanol FF which stops the reaction, denatures the DNA strands, and increases the density of the solution to facilitate gel loading.

Sequencing gel electrophoresis

A 6% polyacrylamide stock was prepared by combining 57 g acrylamide monomer, 3 g BIS (N,N'-methylene-bis-acrylamide), 420 g urea, and 100 mL 10X TBE (0.8 M Tris, 0.9

M boric acid, 25 mM Na_2EDTA), which was then stirred and warmed until dissolved. This solution was filtered and brought to a total volume of 1 L with distilled water. The polyacrylamide stock was stored at 5°C in the dark, and was replaced every month. Sequences were separated in 6% polyacrylamide, 7 M urea gels: each gel contained 40 mL of the 6% polyacrylamide stock solution, 7 M urea stock, 260 uL 10% ammonium persulphate, and 12 uL TEMED (N,N,N',N'-tetramethylethylenediamine) to catalyze the cross-linking reaction.

Two 40 cm by 6 cm glass plates were cleaned with soap and water, and rinsed with distilled water and 100% ethanol. When dry, the inner face of each plate was coated with a thin film of Sigmacote (Sigma), and wiped until smooth and dry with a Kimwipe. Two 0.4 mm spacers were used to separate the glass plates and seal the sides. A plug (6 uL TEMED in 5 mL gel solution) was applied to a wedge of chromatography paper inserted between the glass plates at their bottom edge. After the plug had polymerized (approximately 15 min), gels were poured, combs were inserted, and the apparatus allowed to sit from 4 to 20 h.

Samples were heated to 65°C for 2 min prior to loading. Gels were subjected to electrophoresis at 1600 V, 25mA, 40 W constant power for either 1-1.5 h, or 4-5 h, to obtain the 5' and 3' ends of the sequence, respectively. Gels were fixed for 15 min in 1 L of a 5% methanol/5% acetic acid

solution to remove urea, and dried on to Whatman chromatography paper by vacuum aspiration in a BioRad Model 583 gel dryer for 1-2 h.

Autoradiography

Autoradiography was used to visualize DNA sequences. Dried gels were exposed at room temperature to Kodak AR or RP film for 36-48 h in metal film cassettes. Film was developed by standard procedures and air dried.

Data analysis

DNA sequences were collated and analyzed with the ESEE program (v. 1.04) (Cabot 1988). Cladistic analysis was performed with the PAUP (v. 2.3) program of Swofford (1984).

RESULTS

Albumin electrophoresis

The albumin genotypes of white-tailed deer, mule deer, and their hybrids could be distinguished on cellulose acetate gels (Figure 4). Polyacrylamide gel electrophoresis and isoelectric focusing also were attempted for this study (data not shown), but did not resolve albumin bands clearly. Polyacrylamide gel systems have been used successfully in other studies (McClymont *et al*. 1982; Cronin *et al*. 1988); the reason for their failure here is unknown.

Albumin genotypes of the captive animals (Table 2) corresponded to those obtained for the same animals by polyacrylamide gel electrophoresis at Alberta Fish and Wildlife (R. McClymont, pers. comm.). The electrophoretic patterns are consistent with the monomeric structure of albumin: a two-banded pattern is observed for heterozygotes for a protein that is a monomer. All eight F_1 hybrids were albumin heterozygotes (FS). The seven B_1 mule deer (offspring of F_1 hybrids backcrossed to mule deer) were also all albumin heterozygotes. All four B_2 mule deer (offspring of B_1 hybrids backcrossed to mule deer) were homozygous for the "fast" albumin allele (FF). One mule deer, whose identity as a B_3 hybrid was suggested by the length of its metatarsal gland (R. McClymont, pers. comm.), was an albumin heterozygote. Of the four B_1 white-tailed deer (offspring of

Figure 4. A representative cellulose acetate gel, showing albumin banding patterns. Lanes 1 to 6 show the separation of albumin bands (arrow) in (1) captive F_1 hybrid, (2) white-tailed deer, (3) captive F_1 hybrid, (4) mule deer, (5) putative hybrid, MD2, and (6) captive F_1 hybrid.

F = fast electromorph; S = slow electromorph.

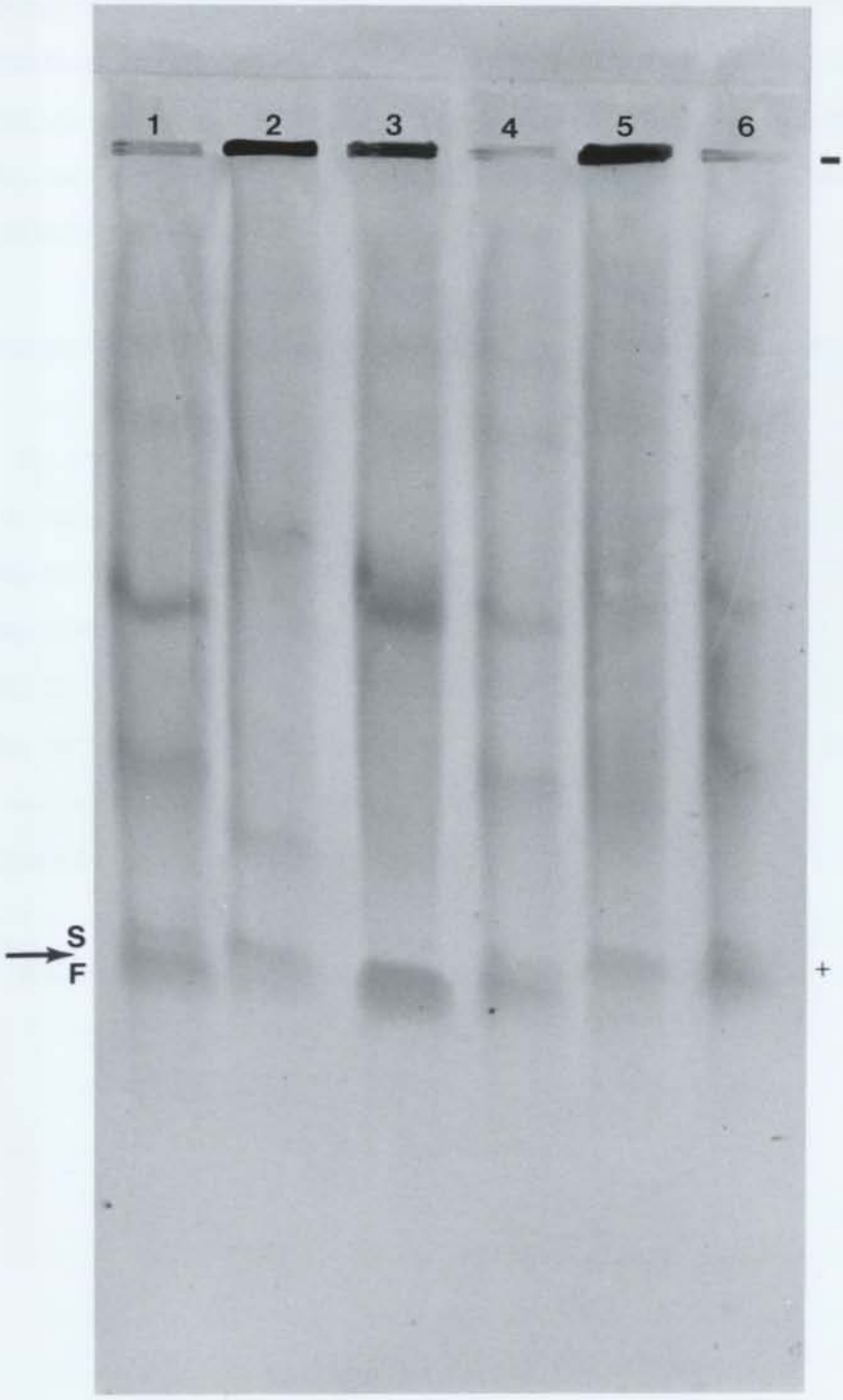
1
2
3
4
5
6
-
S
F
+

Table 2. Albumin genotypes of captive interspecies hybrids, showing the number of hybrid animals examined for albumin banding pattern. Hybrid (F_1) and backcross (B_1, B_2, and B_3) definitions are given in the text. WT, white-tailed deer; MD, mule deer; FF, homozygous fast; SS, homozygous slow; FS, heterozygous.

Cross	Number of Deer	Albumin Genotype	
		expected	observed
F_1	8	FS	FS
B_1 MD	7	FS or FF	FS
B_2 MD	4	FS or FF	FF
B_3 MD*	1	FS or FF	FS
B_1 WT	4	SS or FS	2 SS, 2 FS
B_2 WT	2	SS or FS	1 SS, 1 FS
---	---		
Total	26		

* Parentage uncertain. See text for details.

F_1 hybrids backcrossed to white-tailed deer), two were homozygous for the "slow" albumin allele (SS), and two were albumin heterozygotes. One B_2 white-tailed deer was homozygous "slow", whereas the other was heterozygous for the albumin alleles. Inheritance of albumin alleles in these deer species thus appears to follow a Mendelian pattern through hybrid and backcross generations. The fact that all seven B_1 mule deer showed the same albumin genotype (Table 2) may represent a sampling artifact.

Albumin patterns for captive deer were scored to determine the utility of the cellulose acetate method compared to polyacrylamide gel electrophoresis, and to increase the confidence with which wild deer were typed for albumin. Albumin genotypes of free-ranging deer from western Canada are given in Table 3. All 25 white-tailed deer were homozygous for the "slow" albumin allele. Twenty-seven mule deer were homozygous for the "fast" albumin allele. One deer, MD2, from Banff, Alberta, was an albumin heterozygote (Figure 4). Two mule deer had albumin banding patterns that were unidentifiable.

Cytochrome b sequence variation

Cytochrome b sequence variation was examined within a 302 base pair block for 81 individual deer. All variation observed in this region is the result of single base pair substitutions. Thirty-four nucleotide positions are variable

Table 3. Albumin genotypes of free-ranging deer from western Canada. This table gives the number of mule deer and white-tailed deer which are homozygous for the fast (FF) or slow (SS) allele, or are heterozygous (FS).

Albumin genotype	Mule deer	White-tailed deer
FF	27	0
FS	1	0
SS	0	25
Total	28	25

in sequence comparisons (Figure 5). Eighty-two percent of the variants are third position substitutions, 82% of which are transitions. Eighty-seven percent of the third-position transitions are C<->T interchanges. All five transversions occur at third positions and define changes unique to particular genotypes. Table 4 summarizes the complete distribution of nucleotide substitutions by transition or transversion and by codon position. Figure 6 is a representative DNA sequencing gel, showing nucleotide substitutions between genotypes.

Both second position nucleotide changes result in amino acid replacement substitutions: CGA <-> CAA (position 204 in Figure 5) exchanges arginine and glutamine, and TTC <-> TCC (position 231 in Figure 5) exchanges phenylalanine and serine. The latter substitution is considered a radical change by Grantham (1974). Howell and Gilbert (1988) consider the arginine at position 204 necessary for cytochrome b function: Sitka black-tailed deer have glutamine at this site. Amino acid 66, which was invariant (isoleucine) in the study of over 100 species of vertebrate animals by Kocher et al. (1989) is replaced by valine in deer.

MtDNA genotype distribution and frequency

The 34 variable nucleotide sites identify 13 distinct mtDNA genotypes (Figure 5), nine of which were present in

```
CGY (MD)                          ...............................
BNP (MD)                          ...............................
SWN (MD)                          ...............................
PRO (MD)                          ...............................
KOO (MD)                          ...............................
CYP (MD)                          ...............................
MN1 (WT)                          ...............................
MVL (WT)                          ...............................
ELP (WT)                          ...............................
EDN (WT)                          ...............................
CT1 (WT)                          ...............................
CT2 (WT)                          ...............................
AK1 (BT)                          ...t...............g..........t..c
CONSENSUS                         cttCggctctctgctaggaAtttgcttaatCctA 34
                                   F  G  S  L  L  G  I  C  L  I  L  11

CGY (MD)   ..............t.............................................
BNP (MD)   ..............t.............................................
SWN (MD)   ..............t.............................................
PRO (MD)   ..............t.............................................
KOO (MD)   ..............t.............................................
CYP (MD)   ..............c.............................................
MN1 (WT)   ..............t.............................................
MVL (WT)   ..g...........t.............................................
ELP (WT)   ..............t.............................................
EDN (WT)   ..............t.............................................
CT1 (WT)   ..............t.............................................
CT2 (WT)   ..............t.....t.....g..................................
AK1 (BT)   .....c..c..a..c..................c..c......................c
CONSENSUS  caAatTctTacTggYctattCctagcAatacaTtaTacatccgacacaataacagcattT 94
            Q  I  L  T  G  L  F  L  A  M  H  Y  T  S  D  T  M  T  A  F  31

                                                                  1
CGY (MD)   ...........t...............................c........t......
BNP (MD)   ...........t...............................c........t......
SWN (MD)   ...........t...............................c........t......
PRO (MD)   ...........t...............................c........t......
KOO (MD)   ...........t...............................c........t......
CYP (MD)   ...........t...............................t........c......
MN1 (WT)   ...........t...............................c........t......
MVL (WT)   ...........t...............................c........c......
ELP (WT)   ...........t...............................c........t......
EDN (WT)   ...........t...............................c........c......
CT1 (WT)   ...........c...............................c........t......
CT2 (WT)   ...........t...............................c........c......
AK1 (BT)   ...........c........t...........t...........t........t......
CONSENSUS  tcctctgtcacYcacatctgCcgagacgttaaCtatggctgaatYattcgataYatacat 154
            S  S  V  T  H  I  C  R  D  V  N  Y  G  W  I  I  R  Y  M  H  51
```

Figure 5. Variation in <u>Odocoileus</u> DNA sequences within a 302 base pair region of the mitochondrial cytochrome <u>b</u> gene. The consensus sequence summarizes variation among the 13 genotypes: R = a/g, Y=c/t. Capitals indicate changes unique to one genotype. Numbers identify phylogenetically informative positions summarized in Table 9. Genotype designations are as given in Table 5. Asterisks indicate sites of amino acid substitutions.

```
                                                  2    3
CGY (MD)   ......................t...........t.....c..................
BNP (MD)   ......................t...........c.....t..................
SWN (MD)   ......................t...........t.....c..................
PRO (MD)   ......................c...........t.....c..................
KOO (MD)   ......................t...........c.....t..................
CYP (MD)   ......................t...........c.....t..................
MN1 (WT)   ......................t...........t.....c..................
MVL (WT)   ......................t...........c.....c..................
ELP (WT)   ......................t...........t.....t..................
EDN (WT)   ......................t...........c.....c..................
CT1 (WT)   ......................t...........c.....t..................
CT2 (WT)   ......................t...........t.....t...............t...
AK1 (BT)   ..............a........c.....c.....t.....t..a....a...t......
CONSENSUS  gccaatggagcatcCatattcttYatctgTctattYatacaYgtGggacGaggActAtac 214
            A  N  G  A  S  M  F  F  I  C  L  F  M  H  V  G  R* G  L  Y  71

CGY (MD)   ..........................................................
BNP (MD)   ..........................................................
SWN (MD)   ..........................................................
PRO (MD)   ..........................................................
KOO (MD)   ................c.........................................
CYP (MD)   ..........................................................
MN1 (WT)   ..........................................................
MVL (WT)   ..........................................................
ELP (WT)   ..........................................................
EDN (WT)   ..........................................................
CT1 (WT)   ..........................................................
CT2 (WT)   ..........................................................
AK1 (BT)   ...........c......c........................................
CONSENSUS  tacggatcataTacttTcTtagaaacatgaaacattggagtaattctcctattcacagtt 274
            Y  G  S  Y  T  F* L  E  T  W  N  I  G  V  I  L  L  F  T  V  91

                                  4
CGY (MD)   ................a....g..t....
BNP (MD)   ................g....g..c....
SWN (MD)   ................g....g..t....
PRO (MD)   ................g....g..t....
KOO (MD)   ................g....g..c....
CYP (MD)   ................g....g..c....
MN1 (WT)   ................g....g..c....
MVL (WT)   ................g....g..t....
ELP (WT)   ................g....g..c....
EDN (WT)   ................g....g..t....
CT1 (WT)   ................g....a..c....
CT2 (WT)   ................g....g..c....
AK1 (BT)   ................a....a..c....
CONSENSUS  atagccacagcattcRtaggRtaYgtcc                                302
            M  A  T  A  F     G  Y  V                                   99
```

Figure 5 continued

Table 4. Distribution of nucleotide substitutions in *Odocoileus*.

	Position in Codon			
	1st	2nd	3rd	Total
# Transitions	4	2	23	29
# Transversions	0	0	5	5
Total	4	2	28	34

Figure 6. A representative sequencing gel, showing nucleotide substitutions between genotypes. This gel shows partial sequences from four individuals.

deer from Alberta (Table 5). These genotypes were named after the locality at which they were discovered, but five genotypes (BNP, EDN, MVL, PRO, and SWN) were found at a number of localities.

MtDNA haplotypes of deer from Montana, Connecticut, and Alaska, which had been identified by restriction analysis (Cronin 1986, 1989), were also distinguishable by their characteristic cytochrome b sequences (Table 6). These results suggest that data from Cronin's mtDNA restriction studies are comparable with data from the present cytochrome b study, and permit consideration of mtDNA genotype distribution over a broader geographic area encompassing Alberta and Montana (M. Cronin, pers. comm.). Henceforth, restriction haplotypes identified by Cronin are referred to by their equivalent cytochrome b genotype name as given in Table 6.

In this study, 12 of the 13 mtDNA genotypes are confined to one or the other species (Table 7, excluding Montana data): five genotypes were found only in white-tailed deer, and seven only in mule deer or black-tailed deer. In deer from Alberta, two genotypes were found only in white-tailed deer, six were found only in mule deer, and one was shared between species in one instance.

The mtDNA genotypes identified from western Canada have similar distributions among species from Montana and elsewhere in the U.S. (Table 7). Genotypes BNP, CGY, CYP,

Table 5. Mitochondrial DNA genotypes found in deer from western Canada. Each genotype was given a three-letter code to indicate the first locality at which it was discovered; several genotypes were found at a number of localities.

Genotype	Locality of Discovery	# Deer	#Localities
BNP	Banff Nat'l Park, AL	9	5
CGY	Calgary, AL	1	1
CYP	Cypress Hills, SA	1	1
EDN	Edmonton, AL	22	12
ELP	Elk Point, AL	1	1
KOO	Kootenay Nat'l Park, BC	1	1
MVL	Mannville, AL	3	3
PRO	near Provost, AL	4	3
SWN	Swan Hills, AL	13	9
Total		55	36

Table 6. Correspondence of cytochrome b genotype with mtDNA haplotype. Deer with distinct cytochrome b genotypes also have distinct mtDNA haplotypes. Haplotypes were identified by restriction assay of the entire mtDNA molecule (Cronin 1986, 1989).

Cyt b Genotype	MtDNA Haplotype	Sample Size
CYP	A	2
SWN	B	3
EDN	C	4
BNP	D	2
AK1	E	6
CT1	III	3
CT2	XIII	3
Total		23

Table 7. Distribution of mitochondrial DNA genotypes among Odocoileus populations. Values for Montana deer are from Table 11 in Cronin (1989). Numbers in parentheses are percentages of column totals. AK, Alaska, AL, Alberta; CT, Connecticut; MN, Minnesota; WT, white-tailed deer; MD, mule deer; BT, black-tailed deer.

	Population						
Genotype	AL WT	MT WT	CT WT	MN WT	AL MD	MT MD	AK BT
BNP					9 (30)	61 (27)	
CGY					1 (3)		
CYP					1 (3)	47 (21)	
EDN	21 (84)	109 (97)		1 (50)	1 (3)		
ELP	1 (4)						
KOO					1 (3)		
MVL	3 (12)						
PRO					4 (13)		
SWN		3 (3)			13 (43)	117 (52)	
MN1				1 (50)			
CT1			3 (50)				
CT2			3 (50)				
AK1							6 (100)
Total	25	112	6	2	30	225	6

KOO, and PRO were found only in mule deer. EDN was found only in white-tailed deer, except for one Alberta animal identified as a mule deer. EDN was found also in one white-tailed deer from Minnesota. SWN was shared between species in Montana, but was found exclusively in mule deer in western Canada. No mule deer-type mtDNA genotype was shared with white-tailed deer from Alberta.

EDN was the most common genotype among white-tailed deer from both Alberta and Montana: 84% of white-tailed deer from Alberta and 97% from Montana had this genotype. SWN was the most common genotype among mule deer from both Alberta and Montana: 43% of Alberta mule deer and 52% of Montana mule deer had this genotype. Cronin (1989) found SWN also in 3% of Montana white-tailed deer. BNP was equally common in Alberta (30%) and Montana (27%) mule deer. Several genotypes that occurred at low frequency in Alberta deer were not identified in deer from Montana. The geographic distribution of the nine mtDNA genotypes throughout the sampled localities in western Canada is shown in Figure 7.

Two mtDNA genotypes, CT1 and CT2, were found in equal proportions in white-tailed deer from Connecticut, and all black-tailed deer from Alaska had the same genotype, AK1 (Table 7; Cronin 1989).

Differences in genotypic variability between species was quantified by the nucleon diversity index $\underline{h}$ of Nei and Tajima (1981): $h = (1 - \sum (x^2))(n)/(n-1)$, where $\underline{x}$ is

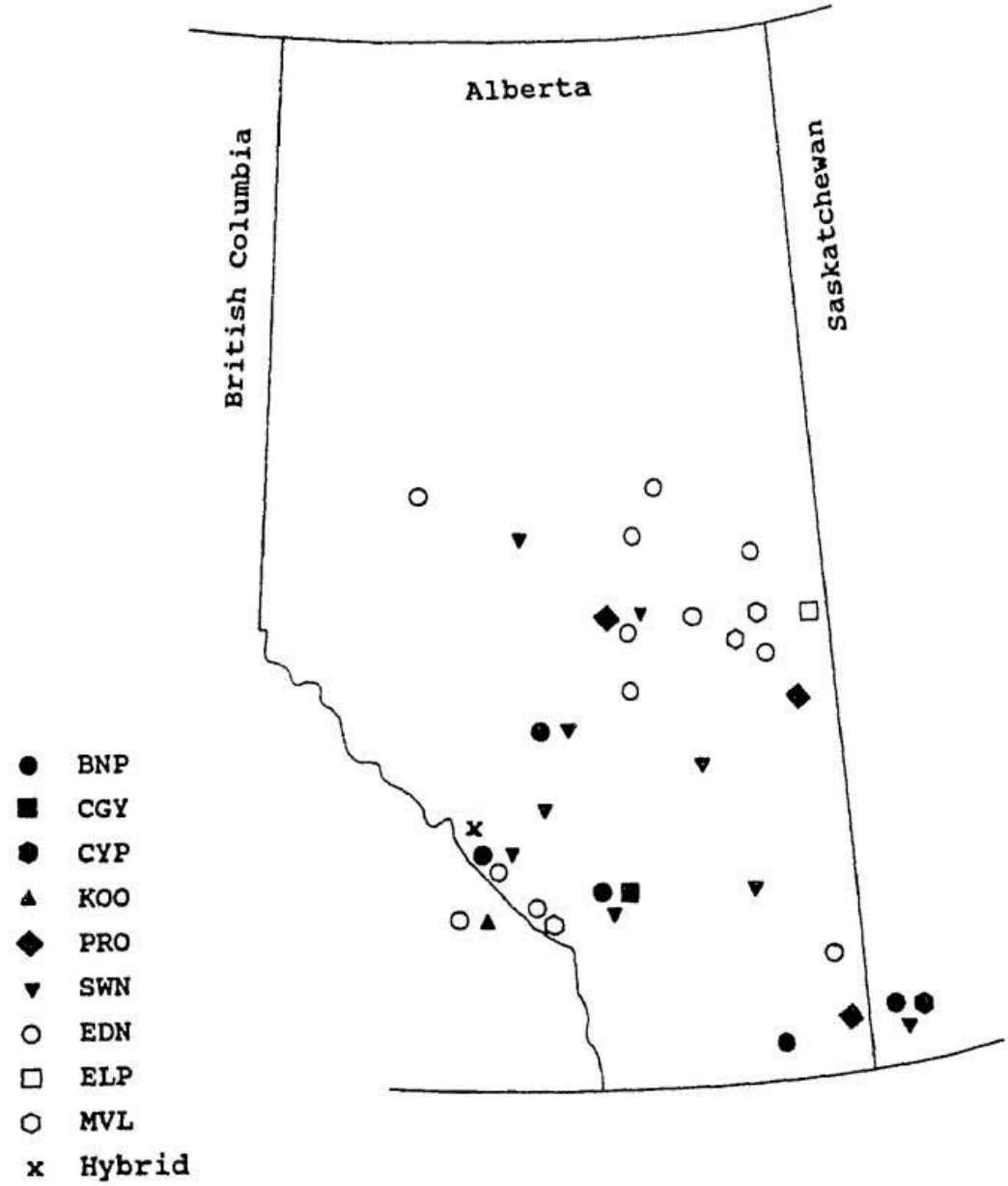

Figure 7. Geographic distribution of 9 Odocoileus genotypes throughout sampled areas of British Columbia, Alberta, and Saskatchewan. Closed and open symbols represent genotypes found in mule deer and white-tailed deer, respectively.

proportion of each genotype in a species, and n is the total number of individuals in the species. By this calculation, mule deer (h = 0.73) have a higher genetic diversity than white-tailed deer (h = 0.29).

MtDNA genotype sequence divergence

A matrix of the cytochrome b sequence divergences between each pair of genotypes is given in Table 8. Intraspecific differences range from 0.3-8.9%, and interspecific differences range from 0.3-9.9%. In some cases, intraspecific differences exceed interspecific differences. For example, genotypes CT1 and CT2 (both found in Connecticut white-tailed deer) differ from each other by 2.3%, whereas MN1 (found in Minnesota white-tailed deer) differs from SWN (found in mule deer) by only 0.3%. Also, Sitka black-tailed deer differ from conspecific mule deer by 8.3-8.9%. Sitka black-tailed deer have the most distinctive genotype, differing from all others by 7.9-9.9%.

Cladistic analysis of mtDNA genotypes

A parsimony analysis was performed on the nine genotypes found in Alberta deer. Nucleotide sequence data identify four phylogenetically informative nucleotide positions among these genotypes (Table 9). [A nucleotide position is "informative" if there are at least two different kinds of nucleotides at that position, and each is

Table 8. Sequence divergences among 13 Odocoileus genotypes. Numbers of nucleotide changes are given in the lower half matrix. The estimated percent sequence divergences are given in the upper half matrix, and were calculated as (number of pairwise differences /302) x 100.

	EDN	MVL	MN1	ELP	CT1	CT2	SWN	CGY	PRO	CYP	KOO	BNP	AK1
EDN	--	0.33	0.99	1.32	1.66	1.99	0.66	0.99	0.99	1.32	1.32	0.99	9.60
MVL	1	--	1.32	1.66	1.99	2.32	0.99	1.32	1.32	1.66	1.66	1.32	9.93
MN1	3	4	--	0.33	1.32	1.66	0.33	0.66	0.66	1.66	0.99	0.66	8.61
ELP	4	5	1	--	0.99	1.32	0.66	0.99	0.99	1.32	0.66	0.33	8.28
CT1	5	6	4	3	--	2.32	1.66	1.99	1.99	1.66	0.99	0.66	7.95
CT2	6	7	5	4	7	--	1.99	2.32	2.32	1.99	1.99	1.66	9.60
SWN	2	3	1	2	5	6	--	0.33	0.33	1.99	1.32	0.99	8.94
CGY	3	4	2	3	6	7	1	--	0.66	2.32	1.66	1.32	8.61
PRO	3	4	2	3	6	7	1	2	--	2.32	1.66	1.32	8.61
CYP	4	5	5	4	5	6	6	7	7	--	1.32	0.99	8.28
KOO	4	5	3	2	3	6	4	5	5	4	--	0.33	8.94
BNP	3	4	2	1	2	5	3	4	4	3	1	--	8.61
AK1	29	30	26	25	24	29	27	26	26	25	27	26	--

Table 9. Four phylogenetically informative nucleotide positions among Odocoileus genotypes.

Genotype	Phylogenetically Informative Position			
	1	2	3	4
BNP	t	c	t	c
KOO	t	c	t	c
CYP	c	c	t	c
EDN	c	c	c	t
MVL	c	c	c	t
ELP	t	t	t	c
PRO	t	t	c	t
SWN	t	t	c	t
CGY	t	t	c	t

represented at least twice (Nei 1987)]. Among Alberta genotypes, PAUP analysis identifies 108 trees with the same minimum length of 6. At least two reversals are necessary to explain the phylogenetic relationships (consistency index = 0.667). No clear phylogenetic picture stands out. Attempts to root the networks with the distinctive AK1 genotype were also problematic: two sites shared between CYP and AK1 suggested that the root be placed near CYP, however reversals at other sites suggested the root be placed elsewhere.

Consequently, a compatibility analysis was performed on these same genotypes. The four phylogenetically informative sites define two polytypic patterns (Figure 8): A) site 1 distinguishes CYP, EDN, and MVL from BNP and KOO, and site 2 distinguishes these from ELP, CGY, PRO, and SWN; B) sites 3 and 4 group CGY, PRO, SWN, EDN, and MVL apart from BNP, KOO, CYP, and ELP. These patterns define two distinct sets of mule deer genotypes, CGY/PRO/SWN and BNP/KOO, and one set of white-tailed deer genotypes, EDN/MVL. Two genotypes, CYP and ELP, are not compatible with this arrangement. CYP (a mule deer genotype) groups with the white-tailed deer set in pattern A. ELP, (a white-tailed deer genotype), does not group with that species in either pattern, and differs from EDN and MVL by nucleotides at all four phylogenetically informative positions.

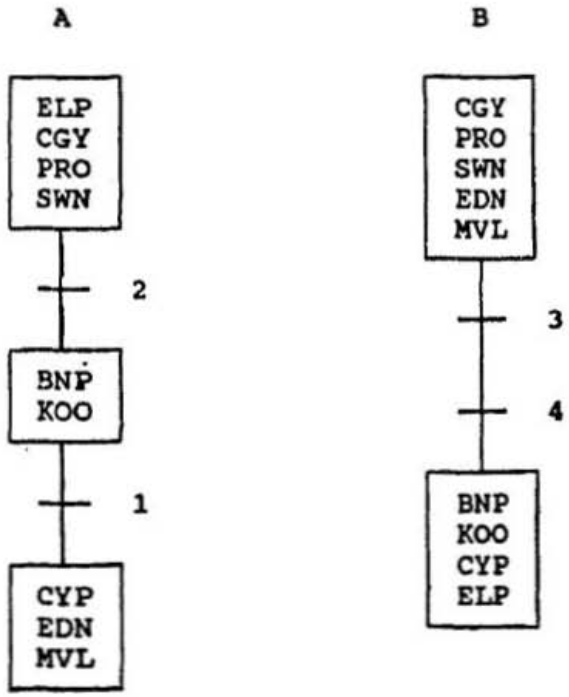

Figure 8. Two compatibility patterns of mtDNA genotypes. Numbers indicate the phylogenetically informative sites in Table 9.

DISCUSSION

Frequency and direction of hybridization in western Canada

The use of electrophoresis of serum albumin to detect hybrids between species of *Odocoileus* is well established (McClymont *et al*. 1982; Stubblefield *et al*. 1986; Cronin *et al*. 1988; Ballinger *et al*. submitted). In this study, albumin genotypes of captive hybrids with known parentage were used as controls for the analysis of albumin genotypes of free-ranging deer. As predicted, all captive F_1 hybrids were albumin heterozygotes, but not all heterozygotes were F_1 hybrids. In one case, the heterozygous condition for albumin was maintained through three backcross generations (Table 2). Because a single-locus analysis cannot discriminate between F_1 hybrids and backcross generations, and because with each generation there is a 50% probability that one of the alleles typical of a hybrid will be lost, albumin analysis alone can not accurately determine the frequency of hybridization in a population. However, in conjunction with mtDNA analysis, albumin genotyping is useful for corroborating hybrid identity. In this study, data from mitochondrial and nuclear sources are consistent: the one animal identified as a mule deer and found to possess white-tailed deer-type mtDNA was also an albumin heterozygote. This deer was the only wild hybrid identified in a sample of 55 animals. Thus, the data indicate little

ongoing hybridization between white-tailed deer and mule deer in western Canada.

These results are similar to those of Cronin (1986, 1989) and Cronin et al. (1988) who demonstrated little interspecific gene flow between white-tailed deer and mule deer in Montana. MtDNA genotypes across the state were species-specific, except for three Montana white-tailed deer that possessed a mule deer-type mtDNA (Table 7). Only 2% of both species sampled from Montana were albumin heterozygotes, and none of these deer showed intermediate morphological characters typical of hybrid deer (Cronin et al. 1988).

In contrast, extensive hybridization and introgression have been detected between the same pair of species in west Texas. Stubblefield et al. (1986) reported an average of 6% hybrids over the entire study area. At one locality, Ballinger et al. (submitted) found 13% of mule deer and 24% of white-tailed deer to be albumin heterozygotes, and 7% of mule deer to be homozygous for the allele characteristic of white-tailed deer. These results suggest significant ongoing hybridization and extensive genetic introgression in this region.

The maternal transmission of mtDNA can reveal the direction of gene flow between hybridizing species. Because the one hybrid identified in this study possessed an mtDNA genotype found otherwise only in white-tailed deer, it

probably had a white-tailed deer maternal ancestor. This suggests movement of mtDNA from white-tailed deer into mule deer. Although it is not possible to generalize about the direction of interspecies matings from a single individual, it is interesting to speculate about the likelihood of crosses in either direction. Other research suggests that white-tailed deer does may be more likely than mule deer does to be involved in interspecies crosses. Among deer populations in Cypress Hills, southern Alberta, Kramer (1973) noted an over-representation of mule deer bucks in heterospecific groups when compared with mule deer does; this may suggest a sexual interest of mule deer bucks in female white-tailed deer. Although Kramer (1973) found neither interspecific pair bonds nor hybrid animals, mule deer bucks were seen harassing sexual pairs of white-tailed deer, perhaps in an effort to break up breeding pairs and to mate with the does.

In contrast, other research suggests that hybridization between these species can occur in the opposite direction. Three white-tailed deer from Montana were found to have mule deer-type mtDNA (Table 7; Cronin 1989), which suggests mitochondrial gene flow from mule deer into white-tailed deer. Further analysis of the west Texas populations examined by Carr et al. (1986) suggests that hybridization there may occur primarily between mule deer does and white-tailed deer bucks (Carr and Hughes, work in progress).

Wishart (1980) noted that the four Alberta hybrids he studied appeared to be associated with mule deer does, suggesting tnat these hybrids had mule deer dams. Wishart (1980) and R. McClymont (pers. comm.) believe that hybridization between white-tailed deer bucks and mule deer does is more likely than the reverse cross for behavioural reasons: white-tailed deer bucks are more persistent in persuing potential mates during the rut than are mule deer bucks, and mule deer does are less likely than white-tailed deer does to flee when approached by a rutting buck of either species. These observations suggest that chances may be greater for a successful cross between a mule deer doe and a white-tailed deer buck than the converse.

The molecular evidence presented in this study and in that by Cronin et al. (1988) and Cronin (1989) confirms that interspecies gene flow between white-tailed deer and mule deer in western Canada and Montana occurs infrequently, and suggests that the species are effectively reproductively isolated there. Identification of mtDNA genotypes of hybrid animals from this area revealed that when an interspecific cross does occur, it may involve gene flow in either direction. This is in contrast to west Texas, where gene flow is predominantly from mule deer into white-tailed deer (Carr and Hughes, work in progress). Various factors may be responsible for differences in frequency and direction of hybridization and introgression in different localities.

Factors affecting hybridization

The frequency and direction of hybridization between species may be related to environmental and/or behavioural factors. Habitat disturbances that disrupt the normal distribution and behaviour of species may affect the likelihood of interspecies crosses. For example, hybridization between two species of frogs (Gerhardt et al. 1980) and between species of fish (Rakocinski 1980) was correlated with recent habitat alteration by humans. Also, the position of hybrid zones between populations of the subterranean mole rat, Spalax, appears to be determined by climatic or ecological disturbances (Nevo 1986).

The frequency of hybridization in deer may be influenced by shifts in species ratios due to habitat disturbances and hunting and predation mortality. Kramer (1973) remarked that hybridization between white-tailed deer and mule deer may be more frequent in areas where white-tailed deer occur in small numbers relative to mule deer. In west Texas, succession of grasslands into desert vegetation has been reported. The subsequent expansion of white-tailed deer into mule deer range may account for interspecies contacts that have resulted in hybridization there (Carr et al. 1986). Extensive clear-cutting in parts of western Canada may account for the recent white-tailed deer range expansion to the north and west. The effects of this activity on interactions between species in these regions is

as yet undetermined (I. McT. Cowan, pers. comm.).

Behaviour is also an important determinant of the likelihood and outcome of interspecies crosses. Avise and Saunders (1984) found that, in the absence of conspecific mates and mating stimuli, females of one species of fish (genus Lepomis) hybridized with males of a more abundant species. As described above for Odocoileus, relaxed stringency in mate choice may account for interspecies crosses (Wishart 1980). Behaviour varies greatly between different subspecies of Odocoileus (I. McT. Cowan, pers. comm.): this in itself may explain the variation in frequency of hybridization between the different white-tailed deer and mule deer subspecies found in Alberta and Texas.

Behaviour and fertility of F_1 hybrids determine the genetic consequences of hybridization: only if F_1 hybrid females breed to their paternal species will introgression of mtDNA occur (Cronin et al. 1988). Although viable F_1 hybrids between species of Odocoileus have been obtained in captivity, behavioural studies suggest that they are more vulnerable to predation than are deer of either parental species (I. McT. Cowan, pers. comm.). Also, histological examination has revealed varying degrees of sperm degeneration among F_1 hybrids (Wishart et al. 1988). Thus, hybrid fitness must be considered to appreciate fully the outcome of interspecies hybridization.

Further studies are required in areas where hybrids have been reported, such as Jasper National Park in Alberta (Wishart 1980), in order to investigate what environmental, behavioural, and other factors might account for hybridization between deer from these localities. Also, histological examination of the relative fertility of female hybrids from both reciprocal crosses might be informative in determining the potential for transmission of mtDNA from one species to another.

Distribution of mtDNA genotypes among deer populations

The distribution of mtDNA genotypes among white-tailed deer and mule deer is similar in Alberta and Montana. The four genotypes found in Montana deer include the most common genotypes found among Alberta deer. The most common lineage, EDN, was also the most widespread in Alberta and Montana (see Table 5, Figure 7), and was found in white-tailed deer sampled from Minnesota (Table 7), Georgia and Illinois (Cronin 1986), and Washington and Oregon (Cronin 1989). The most common genotype among mule deer in Alberta and Montana, SWN, has been identified also in mule deer from Colorado, Oregon, and British Columbia (Cronin 1989). The genotypes involved in hybridization events in Alberta and Montana are those that are the most widespread.

Mule deer show greater genetic diversity than do white-tailed deer. This is apparent in Table 7: twice as many

genotypes are found in mule deer than in white-tailed deer in both Alberta and Montana. The nucleon diversity index demonstrates that mule deer (h = 0.73) have substantially greater mtDNA variability than do white-tailed deer (h = 0.29). MtDNA is highly sensitive to stochastic processes because of the haploid nature of its inheritance. Founder events or population bottlenecks can account for low levels of diversity in mtDNA genotypes. The catastrophic die-offs of wild ungulates in western Canada in the 1880s, followed by rapid increases during the 1940s and 1950s (Wishart 1984) may have adversely affected genetic diversity in white-tailed deer in this region.

Highly mobile animals, like deer, generally show a lack of distinct geographic structure with respect to mtDNA variation. This is the situation in western Canada, where distinct genotypes are found at a number of localities, and several of the genotypes are geographically widespread (Figure 7). Deer in west Texas, however, show a higher degree of microgeographic differentiation of mtDNA (Carr et al. 1986): except for one that is geographically widespread, most genotypes are confined to particular localities. This discrepancy may indicate variability in dispersal patterns of populations inhabiting different climatic regions. In northern climates, white-tailed deer tend to have larger and less stable home ranges than they do in the south (Severinghaus and Cheatum 1956): deer in more temperate

regions disperse further from the maternal home range, and show seasonal migrations that are related to food availability (Marchinton and Hirth 1984). Deer in the southern U.S. show minor seasonal movements in response to food supply, but these are not as extensive as the migrations of more northern populations. This may account for the apparently greater localization of southwestern populations. In addition, because deer were sampled from Alberta at various times throughout the year and over several years, the widespread pattern of mtDNA genotype distribution may be an artifact from sampling the same populations over their migration routes at different times, which would exaggerate the apparent distribution of any particular lineage.

This analysis illustrates the application of molecular genetic techniques to the behaviour and ecology of natural populations. MtDNA genotype data may reveal the frequency and direction of hybridization, the ecological factors that increase the likelihood of hybridization events, and the behaviours that make species prone to hybridization. Also, the differences in life-history patterns between groups are suggested by comparison of the geographic structuring of mtDNA lineages over species' ranges.

Discordance between mtDNA genotype and species affinity

Mitochondrial DNA sequence comparisons are commonly

used to determine the genetic affinities and matriarchal relationships among closely related species (Wilson et al. 1985; Avise 1986). Some animal groups have mtDNA phylogenies that are concordant with relationships defined by morphological, behavioural, or allozyme characters (Avise et al. 1984; Shields and Helm-Bychowski 1988). Other animals, however, show discordance between mtDNA genotype and species designation (Ferris et al. 1983; Powell 1983; DeSalle and Giddings 1986; Wayne et al. 1990). MtDNA restriction analyses (Carr et al. 1986; Cronin et al. 1988) revealed that species of Odocoileus show the latter pattern: mtDNA genotype divergence is greater between subspecies of O. hemionus than it is between O. virginianus and O. hemionus.

Cytochrome b sequence divergence data (Table 8) confirm these observations. In several cases, greater divergence exists between allopatric populations of the same species than between sympatric populations of different species. For example, a Connecticut white-tailed deer genotype differs from an Alberta white-tailed deer genotype by as much as 2.3% (CT2 vs MVL), but another Alberta white-tailed deer genotype and an Alberta mule deer genotype differ by as little as 0.3% (ELP vs BNP). Also, mule deer differ more in mtDNA sequence from conspecific Sitka black-tailed deer than they do from white-tailed deer. Assuming the mean rate of sequence divergence is 2% per million years (Wilson et al. 1985), the minimum interspecies sequence divergence of 0.3%

suggests that speciation within Odocoileus was completed within the last 150,000 years. These data seem inconsistent with the traditional interpretation of the fossil record: remains recognizable as O. hemionus date to 1.9 million years ago (Kurten and Anderson 1980). Discordance between mtDNA and species affinity is also apparent on a smaller scale: genotypes CYP and ELP are not consistently associated with other genotypes of the same species (Figure 8).

Three general explanations for this discordance can be proposed: i) hybridization and differential introgression of mtDNA, ii) differential rates of mtDNA evolution, and iii) mtDNA lineage sorting in a polymorphic ancestral species. In species known to hybridize, differential introgression of mtDNA may explain the presence in one species of an mtDNA genotype found in another. This explanation has been hypothesized for mice (Ferris et al. 1983), deer (Carr et al. 1986), Drosophila (DeSalle and Giddings 1986), tree frogs (Lamb and Avise 1986), and crickets (Harrison et al. 1987). Selective advantage of the "foreign" mtDNA, sterility of male hybrids, and/or mating patterns have been suggested as factors which may contribute to the ultimate fixation of "alien" mtDNA in a species without appreciable contamination of the nuclear genome (Neigel and Avise 1986). The histological work of Wishart et al. (1988) indicates that fertility may be more adversely affected in male than in female F_1 hybrids in Odocoileus. If female F_1 hybrids are

fertile, and if they breed to the paternal parent's species, then they will transmit the maternal-type mtDNA across the species boundary. This "foreign" mtDNA lineage will then be maintained in the species for as long as female offspring reproduce successfully in each generation. If, however, all F_1 hybrids are sterile or if F_1 hybrid females breed back to the maternal parent's species, mtDNA lineages would remain distinct (Cronin et al. 1988).

The low frequency of ongoing hybridization and genetic introgression between deer species in western Canada does not preclude the possibility that they occurred to a greater extent in the past. The compatibility patterns in Figure 8 illustrate the relationships among mtDNA genotypes of these deer. In several cases, white-tailed deer and mule deer genotypes do not form discrete groupings consistent with species affinity. CYP and ELP are not consistently grouped with other genotypes of the species in which they are found. Ancient hybridization, introgression, and subsequent mtDNA sequence divergence could account in part for the present-day genotype distribution. Low frequency hybridization following a genetic bottleneck or founder event might be sufficient to establish one species' mtDNA lineage in the other species. However, hybridization alone may not be sufficient to explain the phylogenetic position of rarer genotypes, which are less likely to have been involved in hybridization events. Also, the considerable sequence

similarity among all white-tailed deer and mule deer genotypes from western Canada, compared to the highly divergent Sitka black-tailed deer lineage, may require a different, or additional, explanation.

Alternatively, discordance between mtDNA genotype and species affinity may be the result of intraspecific variability in rate of mtDNA sequence evolution. Wayne et al. (1990) identified a discontinuous pattern of sequence divergence among mtDNA genotypes of black-backed jackals: 8% mtDNA sequence divergence distinguished several contiguous jackal populations, and only four distinct mtDNA genotypes were found among 64 animals. No intermediate sequence divergence genotypes were identified. These authors attribute their findings to heterogeneity in mtDNA sequence evolution among genotypes within a species. The phylogenetic relationships of deer lineages from western Canada may benefit from examination in light of this hypothesis. Although sequence divergences between genotypes from neighbouring populations are low, and genotypes with intermediate sequence divergence are common, few of the variable sites considered in this analysis represent autapomorphic changes for mule deer or white-tailed deer genotypes. As a result, the genotypes can be arranged in an essentially linear mutational network (data not shown). According to the molecular clock theory, genotypes that diverged from a common ancestor ought to be characterized by

unique nucleotide changes. These data suggest the existence of several "ancestral" genotypes coexisting with descendant lineages, with few or no unique changes separating them, implying unequal mutation rates among mtDNA lineages. Thus, heterogeneity in rate of mtDNA evolution cannot be discounted. Wayne et al. (1990) discuss the possibility of a more rapid rate of cytochrome b sequence evolution relative to the average rate of sequence evolution in the mtDNA genome as a whole, but Carr and Hughes (work in progress) found that the rate of evolution of the cytochrome b gene is comparable to that of the entire mtDNA molecule.

A third explanation for the discordance between mtDNA and species affinity involves the phylogenetic sorting and random extinction of mtDNA lineages derived from an ancestral population that was polymorphic for mtDNA genotype. This hypothesis has been proposed to explain mtDNA genotype distribution between sibling species of mice, Peromyscus maniculatus and P. polionotus (Avise et al. 1983). In addition, Gyllensten and Erlich (1989) present evidence for allelic sequence divergence that predates speciation among primates. One allelic type of a specific human histocompatibility antigen is more similar to its chimpanzee or gorilla counterpart than it is to other human alleles at the same locus. This suggests that polymorphism existed at this locus in the ancestral species that gave rise to the chimpanzee, gorilla, and human lineages. These

and other similar observations illustrate that gene trees and species trees constructed for the same group of organisms can give conflicting results (Pamilo and Nei 1988; Neigel and Avise 1986). Species recently derived from a polymorphic ancestral population are liable to show a phylogenetic tree that disagrees with the tree that represents that species' actual evolutionary pathway. This is especially likely when the gene tree is constructed from DNA sequence analysis of a single locus. Because most studies treat mtDNA as a single linkage group equivalent to a single gene, mtDNA sequence analysis may be unable to resolve the true phylogenies of recently separated populations or species (Pamilo and Nei 1988).

This explanation appears to apply to the deer species studied here. Populations of white-tailed and mule deer from western Canada may be descended from a population polymorphic for mtDNA genotypes. If a variable mtDNA gene pool existed for long periods of time in this ancestral population, considerable sequence divergence may have accumulated before speciation (Cronin 1989). Random sorting and extinction of these mtDNA lineages before speciation may explain the discordant relationships among genotypes of extant species. Interspecies hybridization and/or differential rates of mtDNA evolution may have also contributed to the observed discordance of mtDNA and species affinities in Odocoileus.

Patterns of cytochrome b sequence evolution in Odocoileus

The patterns of nucleotide substitution in the deer cytochrome b gene are generally consistent with patterns of sequence evolution described for other vertebrate species (Brown et al. 1982; Aquadro and Greenberg 1983; DeSalle et al. 1987; Kocher et al. 1989). Third position synonymous transitions predominate over other types of nucleotide changes, and pyrimidine (C<->T) transitions greatly outnumber purine (A<->G) transitions. Among close relatives, such as species within a genus, amino acid substitutions are unusual, and when present are usually conservative (Kocher et al. 1989). However, comparisons between sequences from subspecies of Odocoileus reveal two amino acid substitutions: one is not a conservative change according to Grantham (1974), who measured chemical distance between amino acid pairs. The other substitution involves replacement of an arginine considered essential for cytochrome b function (Howell and Gilbert 1988). The valine at amino acid position 66 in all deer (Figure 5) and cow (data not shown) is noteworthy: Kocher et al. (1989) invariably found isoleucine at this postion in the cytochrome b sequences of over 100 animal species, including Odocoileus and Bos. Reamplification and sequencing of DNA from these deer confirms that the nucleotide substitution responsible for this amino acid substitution is not an artifact introduced during amplification. These amino acid

substitutions have probably exchanged residues that are functionally equivalent, in spite of a low "exchangeability" quotient (Grantham 1974) or apparent requirement in cytochrome b function (Howell and Gilbert 1988).

The detection of rare genotypes not found in the Montana deer by Cronin suggests that direct sequencing of a portion of the cytochrome b gene has higher resolving power than does restriction analysis of the entire mtDNA molecule. Several of the rare Alberta genotypes differ from common ones by only one or two nucleotide substitutions; these small sequence differences may be sufficient to distinguish genotypes with identical restriction patterns. This observation is supported by a study of salmonid species mtDNA in which direct sequencing was more informative than restriction analysis: sequence comparison shows that one restriction genotype comprises two distinct cytochrome b lineages (W. S. Davidson, pers. comm.). These findings suggest that direct sequence analysis of a fragment of mtDNA can detect the genetic subdivision of populations on a finer scale that can restriction analysis. Patterns of mutational change in mtDNA as revealed by direct sequencing are addressed further in the context of a more extensive data set (Carr and Hughes, work in progress).

CONCLUSIONS

This study demonstrates the low frequency of hybridization between white-tailed deer and mule deer in western Canada: only one wild hybrid was identified in a sample of 55 animals. Data from mitochondrial DNA and serum albumin analyses were consistent in hybrid identification. A comparably low frequency of hybridization between the same two subspecies was found in Montana (Cronin et al. 1988), however extensive hybridization and introgression have been detected (Carr et al. 1986) between different subspecies of Odocoileus in west Texas. Interspecies crosses in western Canada and Montana involve gene flow in either direction, whereas hybridization in west Texas may involve primarily mule deer does and white-tailed deer bucks.

These differences in frequency and direction of hybridization in different localities may be due to environmental disturbances, behavioural differences between subspecies, and variable selection against hybrids in the wild. Field studies are necessary to determine the ecological factors responsible for affecting the likelihood of hybridization events. The genetic consequences of interspecies hybridization may be predicted only with information about F_1 hybrid behaviour and fertility.

Phenetic and cladistic analyses show discordance between mtDNA genotype and species affinity for white-tailed deer and mule deer: in several cases, there is greater

divergence between allopatric populations of the same species than between sympatric populations of different species. Also, genotypes from one species intermingle with those of the other in their phylogenetic relationships. Interspecies hybridization and differential introgression of mtDNA, and/or differential rates of mtDNA evolution among mtDNA lineages, and/or mtDNA lineage sorting in a polymorphic ancestor may explain this discordance. Evidence suggests that each of these hypotheses accounts, at least in part, for the observed phylogenetic patterns among genotypes of Odocoileus.

Molecular analyses, interpreted in conjuction with morphological, ecological, and ethological information, are essential for a thorough study of biological systems. This study illustrates the application of molecular genetics to investigation of a natural phenomenon, interspecies hybridization.

LITERATURE CITED

ANDERSON, S., A. T. BANKIER, G. B. BARRELL, M. H. L. DeBRUIJN, A. R. COULSON, J. DROUIN, I. C. EPERSON, D. P. NIERLICH, B. A. ROE, F. SANGER, P. H. SCHREIR, A. J. H. SMITH, R. STADEN, and I. G. YOUNG. 1981. Sequence and organization of the human mitochondrial genome. Nature 290:457-465.

ANDERSON, S., M. H. L. de BRUIJN, A. R. COULSON, I. C. EPERON, F. SANGER, and I. G. YOUNG. 1982. Complete sequence of bovine mitochondrial DNA: Conserved features of the mammalian mitochondrial genome. J. Mol. Biol. 156:683-717.

AQUADRO, C. F. and B. D. GREENBERG. 1983. Human mitochondrial DNA variation and evolution: analysis of nucleotide sequences from seven individuals. Genetics 103:287-312.

ASHLEY, M. V., P. J. LAIPIS, and W. W. HAUSWIRTH. 1989. Rapid segregation of heteroplasmic bovine mitochondria. Nuc. Acids Res. 17:7325-7331.

AVISE, J. C. 1986. Mitochondrial DNA and the evolutionary genetics of higher animals. Phil. Trans. R. Soc. Lond. B 312:325-342.

AVISE, J. C., J. ARNOLD, R. M. BALL, E. BERMINGHAM, T. LAMB, J. E. NEIGEL, C. A. REEB, and N. C. SAUNDERS. 1987. Intraspecific phylogeography: The mitochondrial DNA bridge between population genetics and systematics. Ann. Rev. Ecol. Syst. 18:489-522.

AVISE J. C., E. BERMINGHAM, L. G. KESSLER, and N. C. SAUNDERS. 1984. Characterization of mitochondrial DNA variability in a hybrid swarm between subspecies of bluegill sunfish (Lepomis macrochirus). Evolution 38:931-941.

AVISE, J. C., C. GIBLIN-DAVIDSON, J. LAERM, J. C. PATTON, and R. A. LANSMAN. 1979. Mitochondrial DNA clones and matriarchal phylogeny within and among geographic populations of the pocket gopher Geomys pinetis. Proc. Natl. Acad. Sci. USA 76:6694-6698.

AVISE, J. C. and N. C. SAUNDERS. 1984. Hybridization and introgression among species (Lepomis): analysis by mitochondrial DNA and allozyme markers. Genetics 108:237-255.

AVISE, J. C., J. F. SHAPIRO, S. W. DANIEL, C. F. AQUADRO, R. A. LANSMAN. 1983. Mitochondrial DNA differentiation during the speciation process in Peromyscus. Molec. Biol. Evol. 1:38-56.

BACCUS, R., N. RYMAN, M. H. SMITH, C. REUTERWALL, and D. CAMERON. 1983. Genetic variability and differentiation of large grazing mammals. Evolution 64:109-120.

BAKER, R. H. 1984. Origin, classification, and distribution. Pp 1-18 in L. K. Halls [ed.] White-tailed Deer Ecology and Management. Stackpole, Harrisburg, Penn.

BALLINGER, S. W., L. H. BLANKENSHIP, and J. W. BICKHAM, and S. M. CARR. Allozyme and mitochondrial DNA analysis of a hybrid zone between white-tailed deer and mule deer. Submitted.

BARTLETT, S. E. and W. S. DAVIDSON. 1991. Identification of (Thunnus) tuna species by the polymerase chain reaction and direct sequence analysis of their mitochondrial cytochrome b genes. Can. J. Fish. Aquat. Sci. 48:309-317.

BARTON, N. H. and G. M. HEWITT. 1985. Analysis of hybrid zones. Annu. Rev. Ecol. Syst. 16:113-148.

BARTOS, L. and J. ZIROVNICKY. 1982. Hybridisation between red and sika deer. III. Interspecific behaviour. Zool. Anz. 208:30-36.

BERMINGHAM, E., T. LAMB, and J. C. AVISE. 1986. Size polymorphism and heteroplasmy in the mitochondrial DNA of lower vertebrates. J. Heredity 77:249-252.

BIBB, M. J., R. A. VAN ETTEN, C. T. WRIGHT, M. W. WALBERG, and D. A. CLAYTON. 1981. Sequence and gene organization of mouse mitochondrial DNA. Cell 26:167-180.

BIRKY, C. W., T. MARUYAMA, and P. FUERST. 1983. An approach to population and evolutionary genetic theory for genes in mitochondria and chloroplasts, and some results. Genetics 103:513-527.

BROWN, W. M., M. GEORGE JR., and A. C. WILSON. 1979. Rapid evolution of animal mitochondrial DNA. Proc. Natl. Acad. Sci. USA 76:1967-1971.

BROWN, W. M. and J. M. WRIGHT. 1979. Mitochondrial DNA analyses and the origin and relative age of parthenogenetic lizards (genus Cnemidophorus). Science 203:1247-1249.

BROWN, W. M., E. M. PRAGER, A. WANG, and A. C. WILSON. 1982. Mitochondrial DNA sequences of primates: tempo and mode of evolution. J. Mol. Evol. 18:225-239.

CABOT, E. 1988. The EyeBall Sequence Editor. v. 1.04. Simon Fraser Univ., Burnaby, B.C.

CANN, R. L. and A. C. WILSON. 1983. Length mutations in human mitochondrial DNA. Genetics 104:699-711.

CARR, S. M., S. W. BALLINGER, J. N. DERR, L. H. BLANKENSHIP, and J. W. BICKHAM. 1986. Mitochondrial DNA analysis of hybridization between sympatric white-tailed deer and mule deer in west Texas. Proc. Natl. Acad. Sci. USA 83:9576-9580.

CARR, S. M., A. J. BROTHERS, and A. C. WILSON. 1987. Evolutionary inferences from restriction maps of mitochondrial DNA from nine taxa of Xenopus frogs. Evolution 41:176-188.

CARR, S. M. and O. M. GRIFFITH. 1987. Rapid isolation of animal mitochondrial DNA in a small fixed-angle rotor at ultrahigh speed. Biochem. Genet. 25:385-390.

CARR, S. M. and H. D. MARSHALL. 1991. Detection of intraspecific DNA sequence variation in the mitochondrial cytochrome b gene of Atlantic cod (Gadus morhua) by the polymerase chain reaction. Can. J. Fish. Aquat. Sci. 48:48-52.

COTHRAN, E. G., T. K. CHESSER, M. H. SMITH, and P. E. JOHNS. 1983. Influences of genetic variability and maternal factors on fetal growth in white-tailed deer. Evolution 37:282-291.

COWAN, I. McT. 1956. What and where are the mule and black-tailed deer? Pp 335-359 in W. P. Taylor [ed.] The Deer of North America. Stackpole, Harrisburg, Penn.

COWAN, I. McT. 1962. Hybridization between the black-tail deer and the white-tail deer. J. Mamm. 43:539-541.

COWAN, I. McT. and P. A. JOHNSTON. 1962. Blood serum protein variations at the species and subspecies level in deer of the genus Odocoileus. Syst. Zool. 11:131-138.

CRONIN, M. A. 1986. Genetic relationships between white-tailed deer, mule deer and other large mammals inferred from mitochondrial DNA analysis. M.Sc. Thesis. Montana State University, Bozeman, Mont.

CRONIN, M. A. 1989. Molecular evolutionary genetics and phylogeny of cervids. Ph.D. Diss. Yale University, New Haven, Conn.

CRONIN, M. A. 1991. Mitochondrial and nuclear genetic relationships of deer (Odocoileus spp.) in western North America. Can J. Zool. In press.

CRONIN, M., E. VYSE, and D. CAMERON. 1988. Genetic relationships between mule deer and white-tailed deer in Montana. J. Wildl. Manage. 52:320-328.

DESJARDINS, P. AND R. MORAIS. 1990. Sequence and gene organization of the chicken mitochondrial genome. A novel gene order in higher vertebrates. J. Mol. Biol. 212:599-634.

DESALLE, R., T. FREEDMAN, E. M. PRAGER, and A. C. WILSON. 1987. Tempo and mode of sequence evolution in mitochondrial DNA of Hawaiian Drosophila. J. Mol. Evol. 26:157-164.

DeSALLE, R. and L. V. GIDDINGS. 1986. Discordance of nuclear and mitochondrial DNA phylogenies in Hawaiian Drosophila. Proc. Natl. Acad. Sci. USA 83:6902-6906.

FAURON, C. M.-R. and D. R. WOLSTENHOLME. 1980. Extensive diversity among Drosophila species with respect to nucleotide sequences within the adenine + thymine-rich region of mitochondrial DNA molecules. Nuc. Acids Res. 8:2439-2452.

FERRIS, S. D., R. D. SAGE, C-M. HUANG, J. T. NIELSEN, U. RITTE, and A. C. WILSON. 1983. Flow of mitochondrial DNA across a species boundary. Proc. Natl. Acad. Sci. USA 80:2290-2294.

GADALETA, G., G. PEPE, G. DeCANDIA, C. QUAGLIARIELLO, E. SBISA, and C. SACCONE. 1989. The complete nucleotide sequence of the Rattus norvegicus mitochondrial genome: Cryptic signals revealed by comparative analysis between vertebrates. J. Mol. Evol. 28:497-516.

GAVIN, T. A. 1984. Pacific Northwest. Pp 487-496 in L. K. Halls [ed.] White-tailed deer Ecology and Management. Stackpole, Harrisburg, Penn.

GAVIN, T. A. and B. MAY. 1988. Taxonomic status and genetic purity of Columbian white-tailed deer. J. Wildl. Manage. 52:1-10.

GEIST, V. 1987. On speciation in Ice Age mammals, with special reference to cervids and caprids. Can. J. Zool. 65:1067-1084.

GERHARDT, G. C., S. I. GUTTMAN, and A. A. KARLIN. 1980. Natural hybrids between Hyla cinerea and Hyla gratinosa: morphology, vocalization and electrophoretic analysis. Copeia (4):577-584.

GODDARD, J. M. and D. R. WOLSTENHOLME. 1980. Orgin and direction of replication in mitochondrial DNA molecules from the genus Drosophila. Nuc. Acids Res. 8:741-757.

GRANTHAM, R. 1974. Amino acid difference formula to help explain protein evolution. Science 185:862-864.

GRAY, A. P. 1971. Mammalian hybrids. A check-list with bibliography. Commonwealth Agricultural Bureau, Farnham Royal, Buckinghamshire, England. 2nd ed.

GYLLENSTEN, U. and H. A. ERLICH. 1989. Ancient roots for polymorphism at the HLA-DQ locus in primates. Proc. Natl. Acad. Sci. USA 86:9986-9990.

HALL, W. P. and R. K. SELANDER. 1973. Hybridization of karyotypically differentiated populations in the Sceloporus grammicus complex (Iguanidae). Evolution 27:226-242.

HARRISON, R. G. 1989. Animal mitochondrial DNA as a genetic marker in population and evolutionary biology. Trends in Ecol. and Evol. 4:6-11.

HARRISON, R. G., D. M. RAND, and W. C. WHEELER. 1987. Mitochondrial DNA variation in field crickets across a narrow hybrid zone. Mol. Biol Evol. 4:144-158.

HAUSWIRTH, W. W. and P. LAIPIS. 1982. Mitochondrial DNA polymorphism in a maternal lineage of Holstein cows. Proc. Natl. Acad. Sci. USA 79:4686-4690.

HAUSWIRTH, W. W., M. J. VANDEWALLE, P. J. LAIPIS, and P. D. OLIVO. 1984. Heterogeneous mitochondrial DNA D-loop sequences in bovine tissue. Cell 37:1001-1007.

HEWITT, G. M. 1988. Hybrid zones - Natural laboratories for evolutionary studies. Trends in Ecol. Evol. 3:158-167.

HOWELL, N. and K. GILBERT. 1988. Mutational analysis of the mouse mitochondrial cytochrome b gene. J. Mol. Biol. 203:607-618.

HUNT, W. G. and R. K. SELANDER. 1973. Biochemical genetics of hybridisation in European house mice. Heredity 31:11-33.

JACOBS, H. T., D. J. ELLIOTT, V. B. MATH, and A. FARQUHARSON. 1988. Nucleotide sequence and gene organization of sea urchin mitochondrial DNA. J. Mol. Biol. 202:185-217.

KENNEDY. P. K., M. L. KENNEDY, and M. L. BECK. 1987. Genetic variablility in white-tailed deer (Odocoileus virginianus) and its relationship to environmental parameters and herd origin (Cervidae). Genetica 74:189-201.

KOCHER, T. D., W. K. THOMAS, A. MEYER, S. V. EDWARDS, S. PAABO, F. X. VILLABLANCA, and A. C. WILSON. 1989. Dynamics of mitochondrial DNA evolution in animals: Amplification and sequencing with conserved primers. Proc. Natl. Acad. Sci. USA 86:6196-6200.

KOCHER, T. D. and T. J. WHITE. 1989. Evolutionary Analysis via PCR. Pp 137-147 in H. A. Ehrlich [ed.] PCR Technology. Stockton Press, New York.

KRAMER, A. 1973. Interspecific behaviour and dispersion of two sympatric deer species. J. Wildl. Manage. 37:288-300.

KRAUSMAN, P. R. 1978. Forage relationships between two deer species in Big Bend National Park, Texas. J. Wildl. Manage. 42:101-107.

KURTEN, B. and E. ANDERSON. 1980. Pleistocene Mammals of North America. Columbia Univ., New York.

LAMB, T. and J. C. AVISE. 1986. Directional introgression of mitochondrial DNA in a hybrid population of tree frogs: the influence of mating behaviour. Proc. Natl. Acad. Sci. USA 83: 2526-2530.

LANSMAN, R. A., J. C. AVISE, and J. D. HUETTEL. 1983. Critical experimental test of the possibility of "paternal leakage" of mitochondrial DNA. Proc. Natl. Acad. Sci. USA 80:1969-1971.

LANSMAN, R. A., R. O. SHADE, J. F. SHAPIRA, and J. C. AVISE. 1981. The use of restriction endonucleases to measure mitochondrial DNA sequence relatedness in natural population. J. Mol. Evol. 17:214-226.

LOWE , V. P. and A. S. GARDINER. 1975. Hybridization between Red deer (Cervus elaphus) and Sika deer (Cervus nippon) with particular reference to stocks in N.W. England. J. Zool., Lond. 177:553-566.

MARCHINTON, R. L. and D. H. HIRTH. 1984. Behavior. Pp 129-168 in L. K. Halls [ed.] White-tailed Deer Ecology and Management. Stackpole, Harrisburg, Penn.

MARTINKA, C. J. 1968. Habitat relationships of white-tailed and mule deer in northern Montana. J. Wildl. Manage. 32:558-565.

McCLYMONT, R. A., M. FENTON, and J. R. THOMPSON. 1982. Identification of cervid tissues and hybridization by serum albumin. J. Wildl. Manage. 46:540-544.

MOORE, W. S. 1977. An evaluation of narrow hybrid zones in vertebrates. Quart. Rev. Biol. 52:263-278.

NEI, M. 1987. Phylogenetic Trees. Pp. 287-326 in Molecular Evolutionary Genetics. Columbia Press.

NEI, M. and F. TAJIMA. 1981. DNA polymorphism detectable by restriction endonucleases. Genetics 97:145-163.

NEIGEL, J. E. and J. C. AVISE. 1986. Phylogenetic relationships of mitochondrial DNA under various demographic models of speciation. Pp 515-534 in S. Karlin and E. Nevo [eds.] Evolutionary Processes and Theory. Academic Press, Orlando, Florida.

NEVO, E. 1986. Mechanisms of adaptive speciation at the molecular and organismal levels. Pp 439-474 in S. Karlin and E. Nevo [eds.] Evolutionary Processes and Theory. Academic Press, Orlando, Florida.

NICHOL, A. A. 1938. Hybrids. Univ. of Arizona Tech. Bull. 75:1-39.

NICHOLS, R. and J. MURRAY. 1973. Black-tailed deer - white-tailed deer breeding study. Final Report, P-R Project W-46 (V-A, V-B). Nashville, Tennessee Game and Fish Commission.

OCEANAK, C. P. 1977. Frequency of naturally occurring hybrids among mule deer (Odocoileus hemionus) and white-tailed deer (Odocoileus virginianus) in portions of eastern Wyoming. M.Sc. Thesis. University of Wyoming, Laramie, Wyoming.

PAMILO, P. and M. NEI. 1988. Relationships between gene trees and species trees. Mol. Biol Evol. 5:568-583.

PEDEN, D. G. and G. J. KRAAY. 1979. Comparison of blood characteristics in plains bison, wood bison, and their hybrids. Can. J. Zool. 57:1778-1784.

POWELL, J. R. 1983. Interspecific cytoplasmic gene flow in the absence of nuclear gene flow: Evidence from Drosophila. Proc. Natl. Acad. Sci. USA 80:492-495.

RAKOCINSKI, C. F. 1980. Hybridization and introgression between Campostoma oligolepis and C. anomalum pullum (Cypriniformes: Cyprinidae). Copeia (4):584-594.

RAMSEY, P. R., J. C. AVISE, M. H. SMITH, and D. F. URBSTON. 1979. Biochemical variation and genetic heterogeneity in South Carolina deer populations. J. Wildl. Manage. 43:136-142.

RAND, D. M. and R. G. HARRISON. 1989. Molecular population genetics of mtDNA size variation in crickets. Genetics 121:551-569.

ROE, B. A., D. P. MA, R. K. WILSON, and J. F.-J. WONG. 1985. The complete nucleotide sequence of the Xenopus laevis mitochondrial genome. J. Biol Chem. 260:9759-9774.

ROMER, A. 1966. Vertebrate Paleontology. Univ. of Chicago Press, Chicago and London.

SAIKI, R. K., D. H. GELFLAN, S. STOFFEL, S. J. SCHARF, R. HIGUCHI, G. T. HORN, K. B. MULLIS, and H. A. EHRLICH. 1988. Primer-directed enzymatic amplification of DNA with a thermostable DNA polymerase. Science 239:487-491.

SANGER, F., S. NICKLEN, and A. R. COULSON. 1977. DNA sequencing with chain-terminating inhibitors. Proc. Natl. Acad. Sci. USA 74:5463-5467.

SARICH, V. M. 1968. The origin of the Hominids: An immunological approach. Pp 94-121 in S. L. Washburn and P. C. Jay [eds.] Perspectives on Human Evolution. Holt, Rinehart and Winston, New York.

SEVERINGHAUS, C. W. and E. L. CHEATUM. 1956. Life and times of the white-tailed deer. Pp 57-186 in W. P. Taylor [ed.] The Deer of North America. Stackpole, Harrisburg, Penn.

SHIELDS, G. F. and K. M. HELM-BYCHOWSKI. 1988. Mitochondrial DNA of birds. Pp 273-295 in R. F. Johnston [ed.] Current Ornithology, vol. 5. Plenum Publishing Co.

SMITH, W. P. 1987. Dispersion and habitat use by sympatric Columbian white-tailed deer and Columbian black-tailed deer. J. Mamm. 68:337-347.

SMITH, M. H., W. V. BRANAN, R. L. MARCHINTON, P. E. JOHNS, and M. C. WOOTEN. 1986. Genetic and morphologic comparisons of red brocket, brown brocket, and white-tailed deer. J. Mamm. 67:103-111.

SMITH, M. H., H. O. HILLESTAD, R. BACCUS, and M. N. MANLOVE. 1984. Population genetics. Pp 119-128 in L. K. Halls [ed.] White-tailed Deer Ecology and Management. Stackpole, Harrisburg, Penn.

STUBBLEFIELD, S., R. WARREN, and B. MURPHY. 1986. Hybridization of free-ranging white-tailed and mule deer in Texas. J. Wildl. Manage. 50:688-690.

SWOFFORD, D. L. 1984. Phylogenetic Analysis Using Parsimony. v. 2.3. Illinois Natural History Survey. Champaign, Ill.

SZYMURA, J. M. and N. H. BARTON. 1986. Genetic analysis of a hybrid zone between the fire-bellied toads, Bombina bombina and B. variegata, near Cracow in Southern Poland. Evolution 40:1141-1159.

TEMPLETON, A. 1983. Phylogenetic inference from restriction endonuclease cleavage site maps with particular reference to the evolution of humans and the apes. Evolution 37:221-244.

UPHOLT, W. B. and I. B. DAWID. 1977. Mapping of mitochondrial DNA of individual sheep and goats: rapid evolution in the D loop region. Cell 11:571-583.

WALLMO, O. C. 1981. Mule and black-tailed deer distribution and habitats. Pp 1-25 in O. C. Wallmo [ed.] Mule and Black-tailed Deer of North America. Univ. of Nebraska, Lincoln and London.

WAYNE, R. K., A. MEYER, N. LEHMAN, B. VAN VALKENBURGH, P. W. KAT, T. K. FULLER, D. GIRMAN, and S. J. O'BRIEN. 1990. Large sequence divergence among mitochondrial DNA genotypes within populations of eastern African black-backed jackals. Proc. Natl. Acad. Sci. USA 87:1772-1776.

WILSON, A. C., R. L. CANN, S. M. CARR, M. GEORGE, U. B. GYLLENSTEN, K. M. HELM-BYCHOWSKI, R. G. HIGUCHI, S. R. PALUMBI, E. M. PRAGER, R. D. SAGE, and M. STONEKING. 1985. Mitochondrial DNA and two perspectives on evolutionary genetics. Biol. J. Linn. Soc. 26:375-400.

WILSON, A. C., L. R. MAXSON, and V. M. SARICH. 1974. Two types of molecular evolution. Evidence from studies of interspecific hybridization. Proc. Nat. Acad. Sci. USA 71:2843-2847.

WISHART, W. D. 1980. Hybrids of white-tailed and mule deer in Alberta. J. Mamm. 61:716-720.

WISHART, W. D. 1984. Western Canada. Pp 475-486 in L. K. Halls [ed.] White-tailed Deer Ecology and Management. Stackpole, Harrisburg, Penn.

WISHART, W. D., F. HRUDKA, S. M. SCHMUTZ, and P. F. FLOOD. 1988. Observations on spermatogenesis, sperm phenotype, and fertility in white-tailed x mule deer hybrids and a yak x cow hybrid. Can. J. Zool. 66:1664-1671.

YANG, S. Y. and R. K. SELANDER. 1968. Hybridization in the grackle Quiscalus quiscula. Syst. Zool. 17:107-143.

ZUCKERKANDL, E. and L. PAULING. 1965. Evolutionary divergence and convergence in proteins. Pp 97-166 in V. Bryson and H. J. Vogel [eds.] Evolving Genes and Proteins. Academic Press, New York.